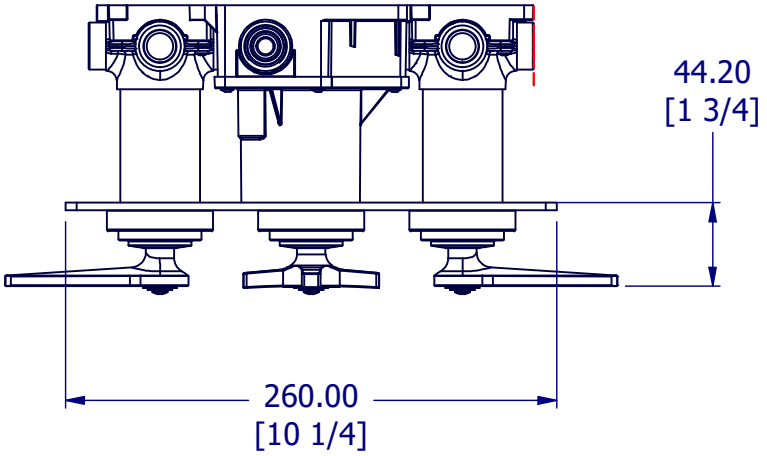

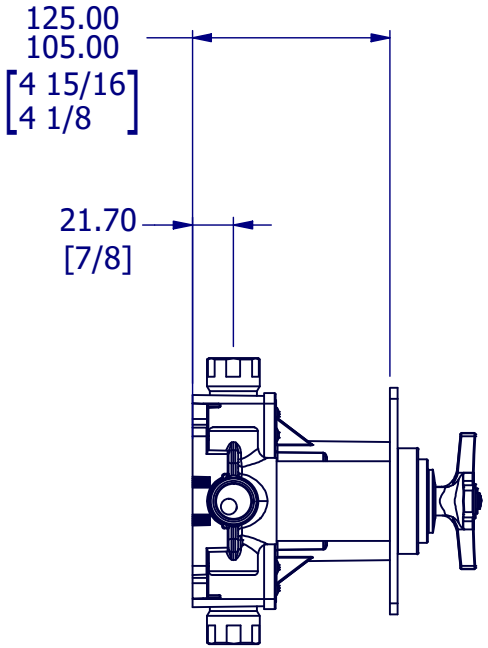

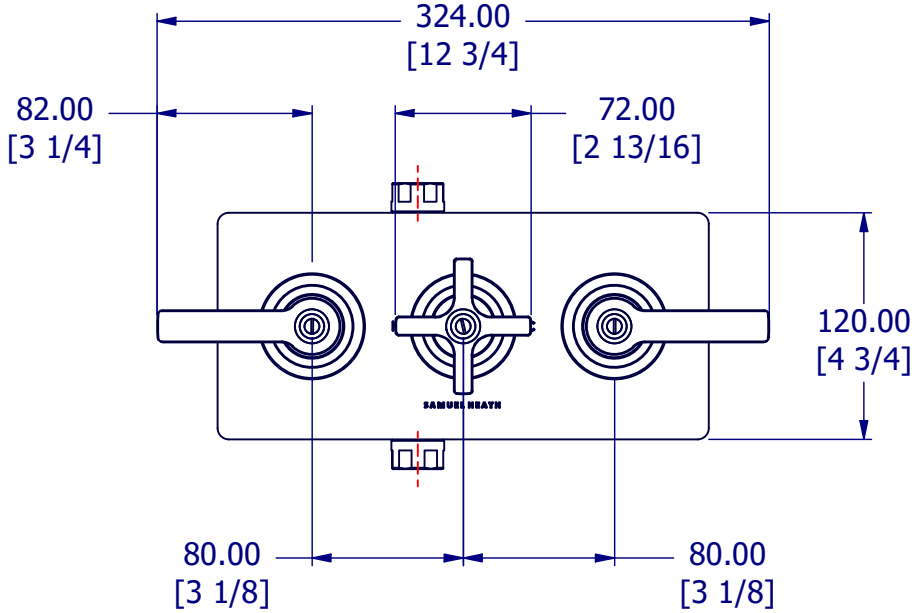

PROPERTY OF SAMUEL HEATH ©			DESIGNER		S.WHIELDON	
A4	DRG No	V7105-TLF	ISSUE NO.	A	ISSUE DATE	8.2.26