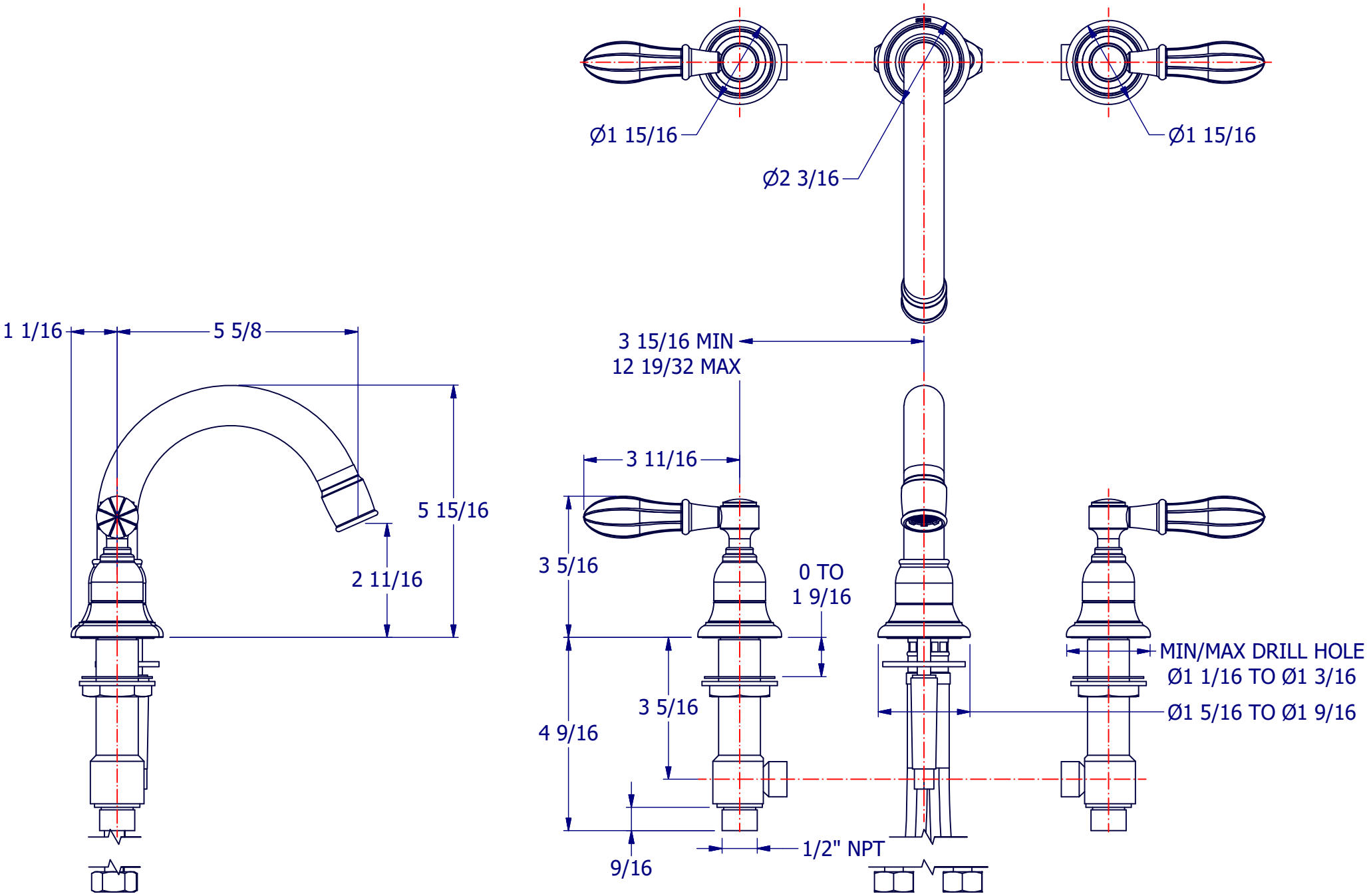

PROPERTY OF SAMUEL HEATH ©			DESIGNER		ANTONIO DUGGAL	
A4	DRG No	V2KA16-GB/GC-NP	ISSUE NO.	A	ISSUE DATE	12/09/18