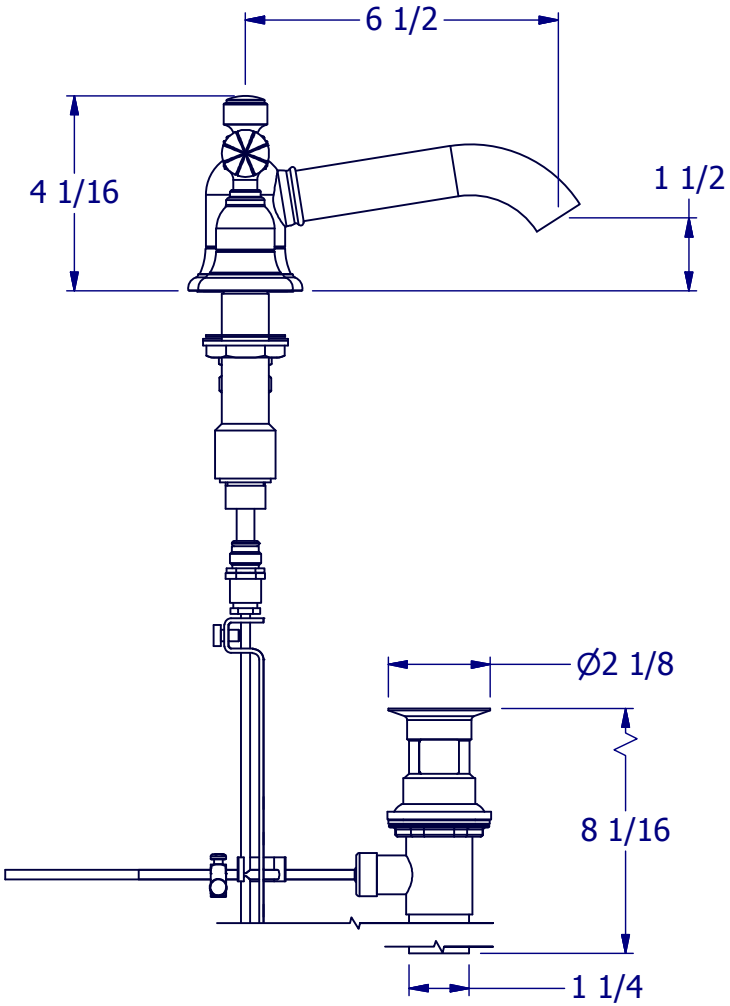


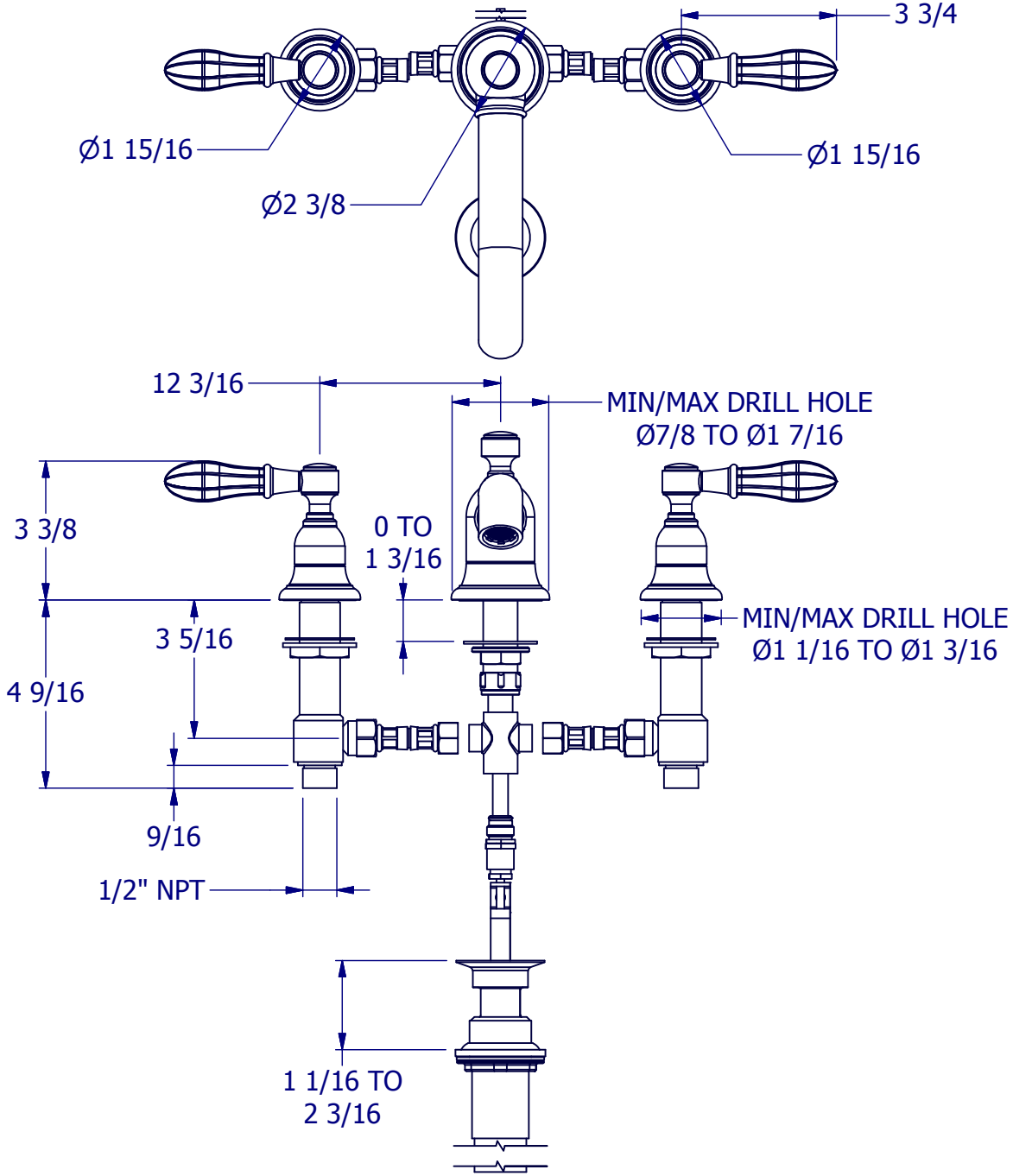


| | | | | | | |
|---|---|---|---|---|---|---|
| PROPERTY OF SAMUEL HEATH © | | | DESIGNER | | ANTONIO DUGGAL | |
| A4 | DRG No | V2KA15-GB/GC | ISSUE NO. | A | ISSUE DATE | 30/07/18 |