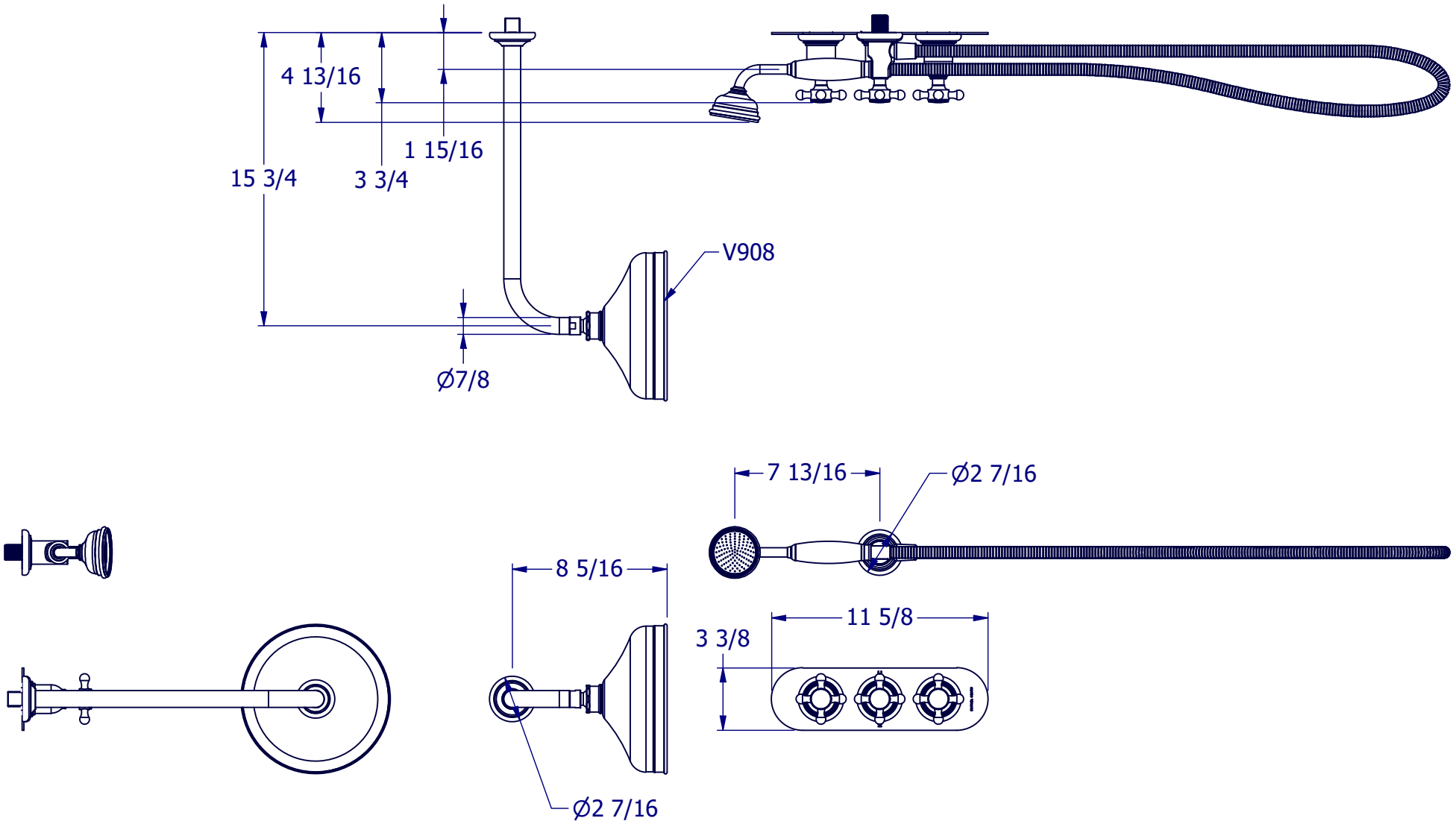

PROPERTY OF SAMUEL HEATH ©			DESIGNER		C.DANKS	
A4	DRG No	V21B2AXX 08	ISSUE NO.	A	ISSUE DATE	25/09/26