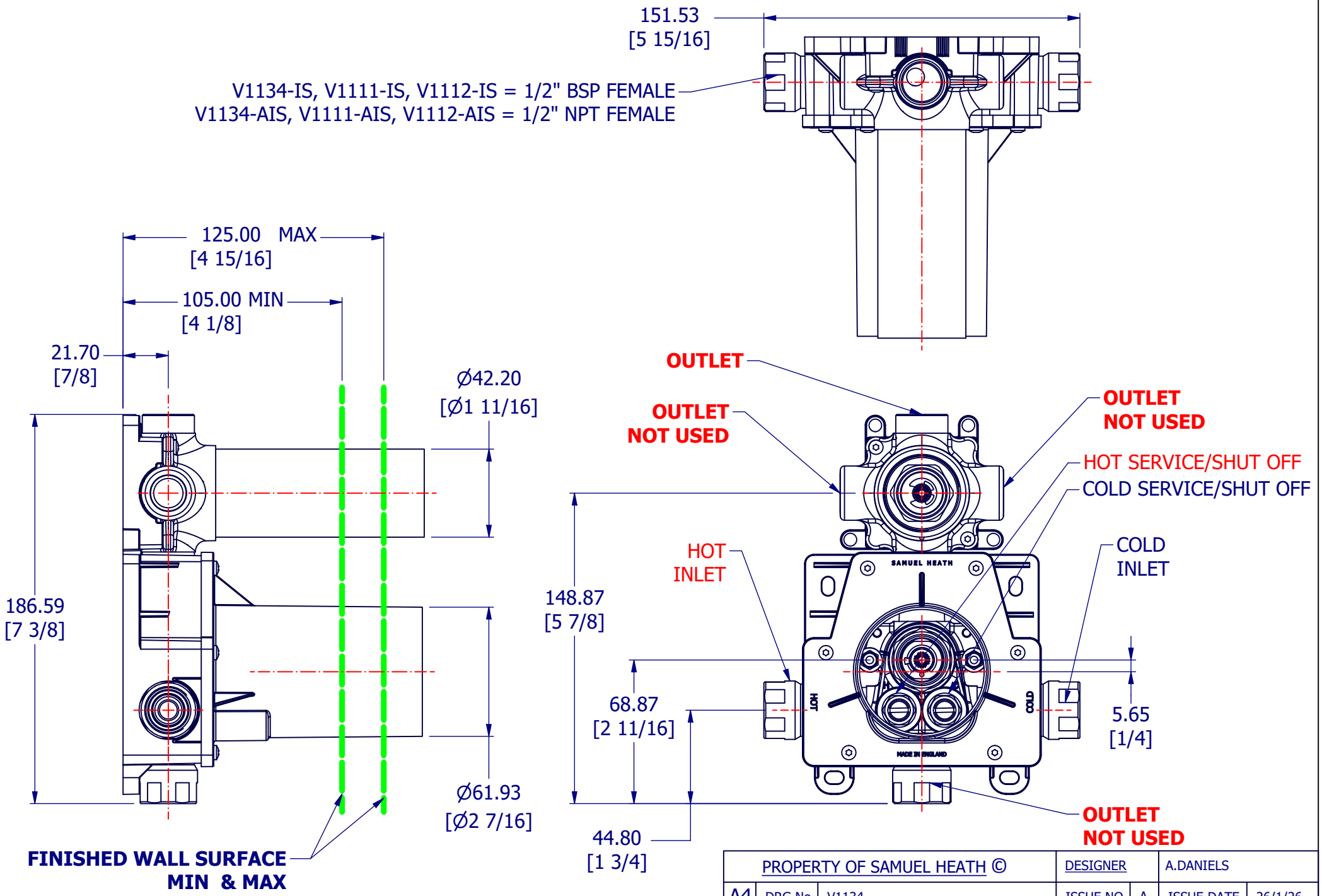

PROPERTY OF SAMUEL HEATH ©			DESIGNER		A.DANIELS	
A4	DRG No	V1134	ISSUE NO.	A	ISSUE DATE	26/1/26