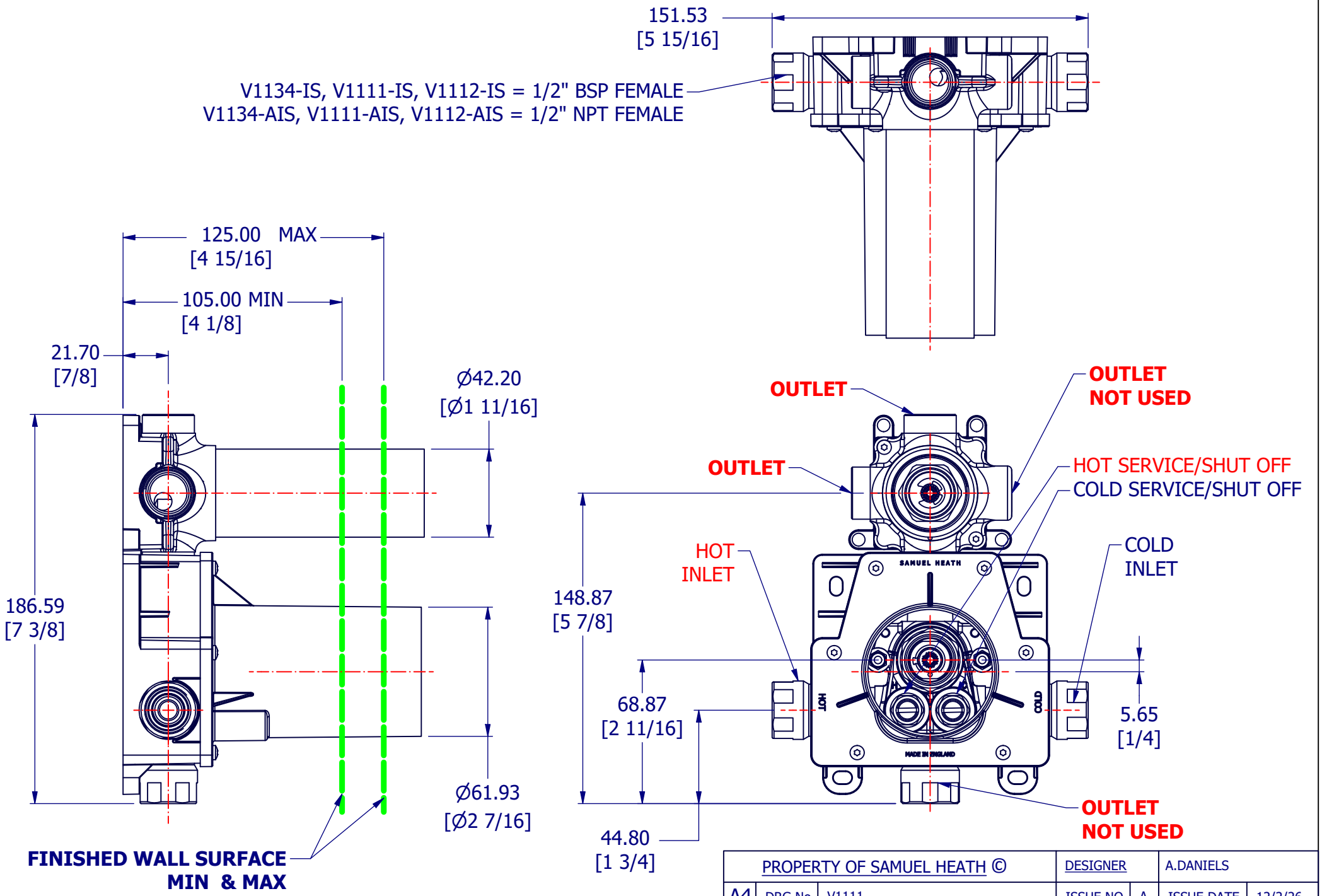

PROPERTY OF SAMUEL HEATH ©			DESIGNER		A.DANIELS	
A4	DRG No	V1111	ISSUE NO.	A	ISSUE DATE	12/2/26