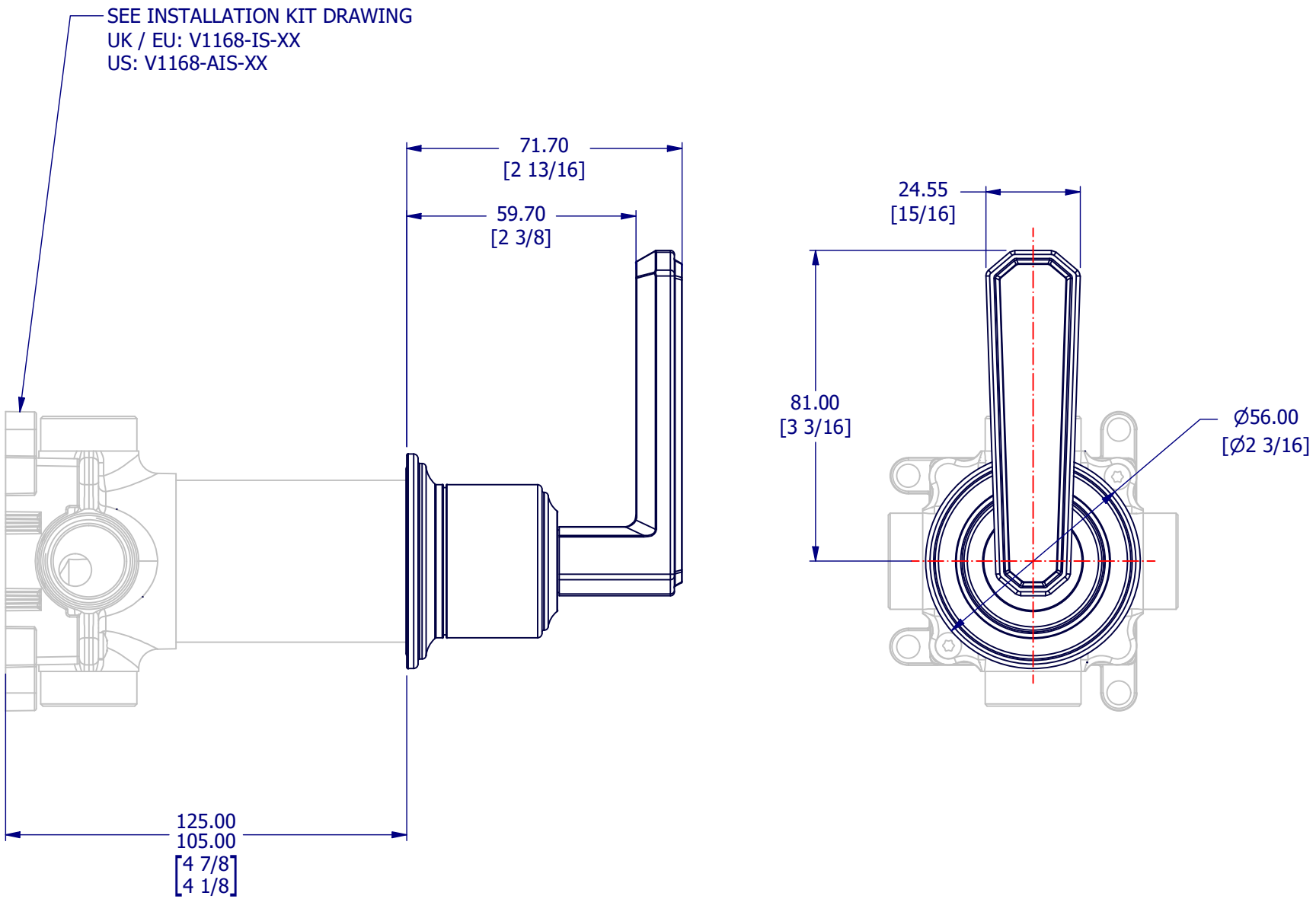

PROPERTY OF SAMUEL HEATH ©			DESIGNER		O.REEVES	
A4	DRG No	T5168-TL	ISSUE NO.	A	ISSUE DATE	12/11/25