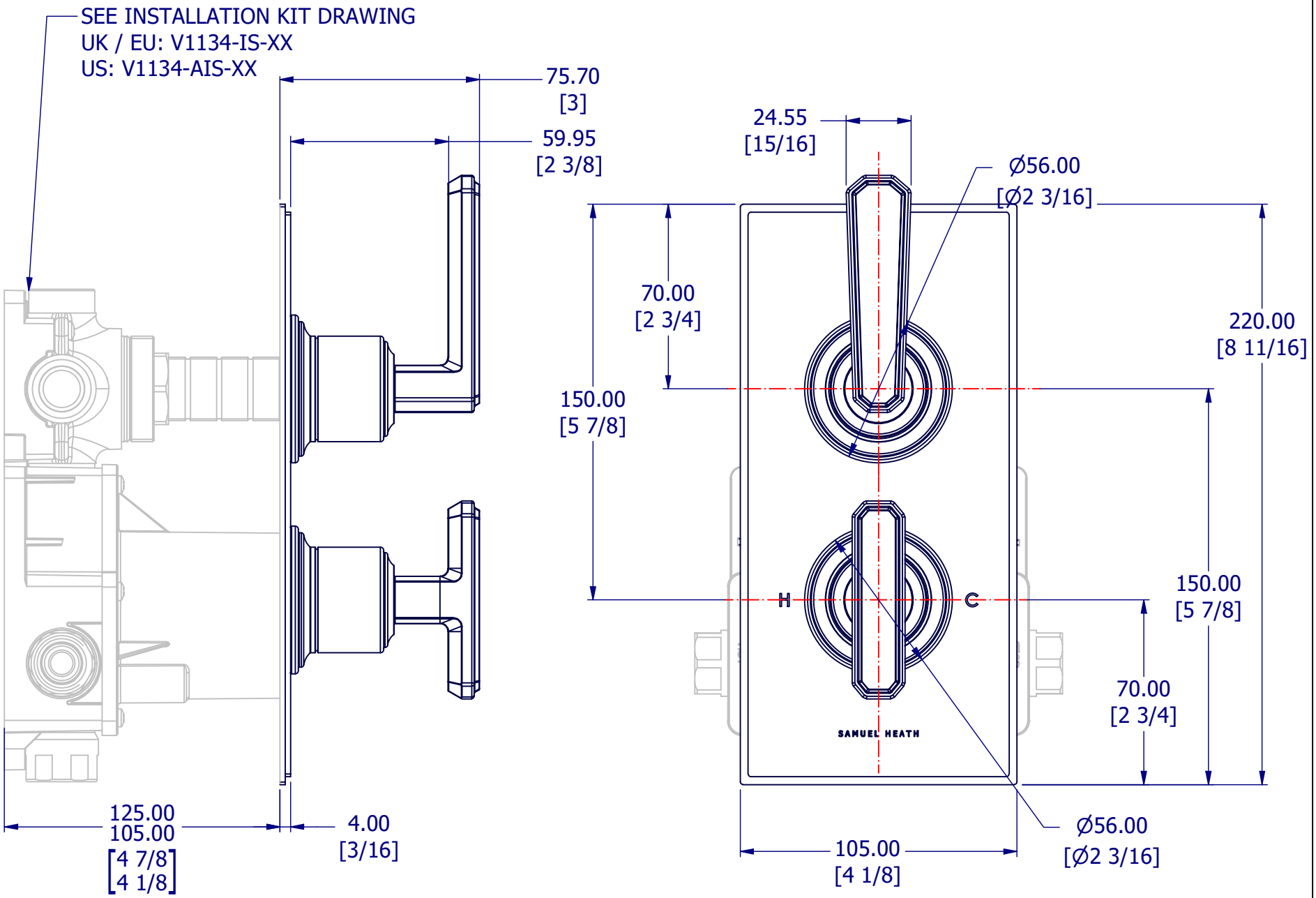

PROPERTY OF SAMUEL HEATH ©			DESIGNER		O.REEVES	
A4	DRG No	T5102-TL	ISSUE NO.	A	ISSUE DATE	11/11/25