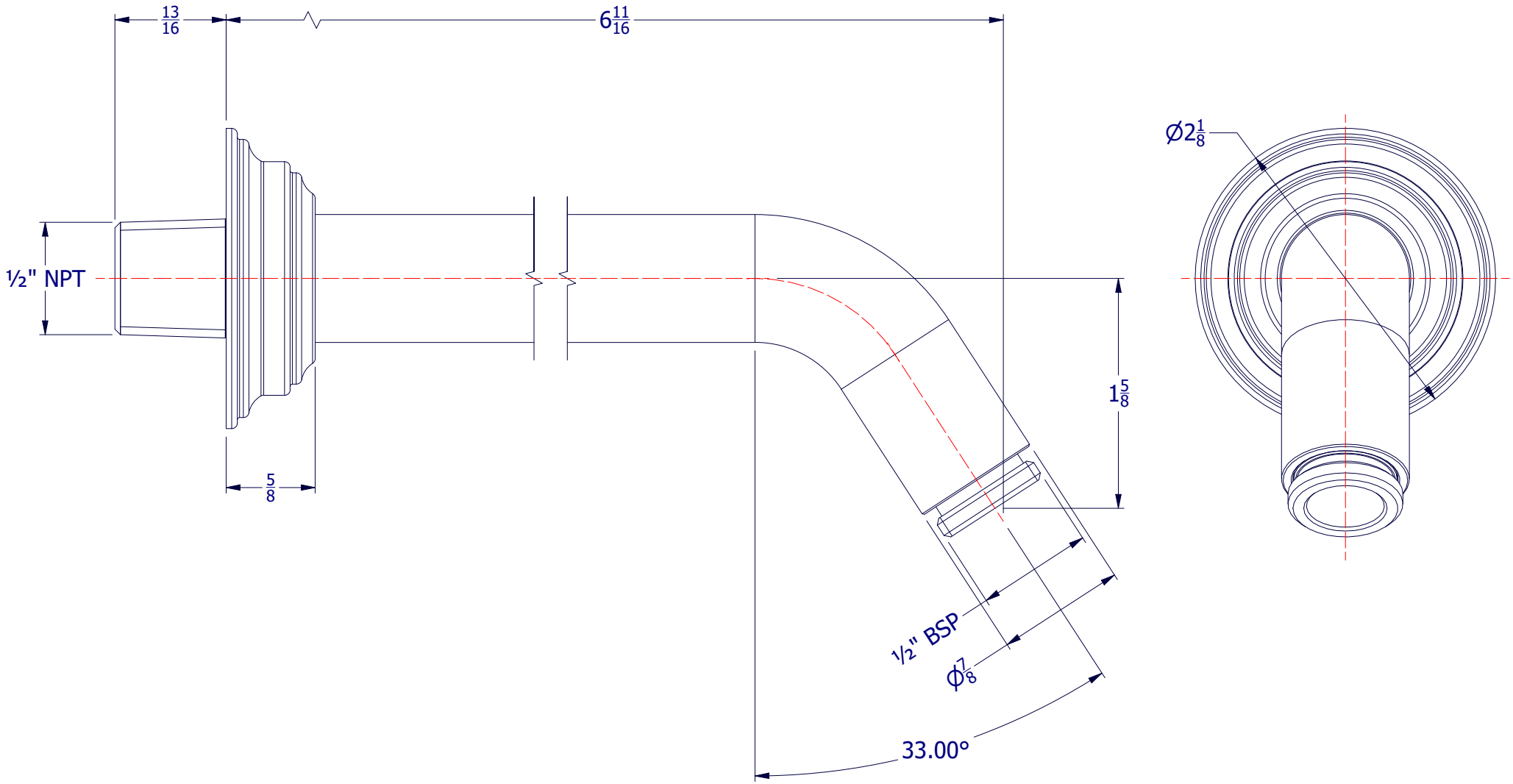

PROPERTY OF SAMUEL HEATH ©			DESIGNER		O.REEVES	
A4	DRG No	T50KA790-B	ISSUE NO.	A	ISSUE DATE	15/07/25