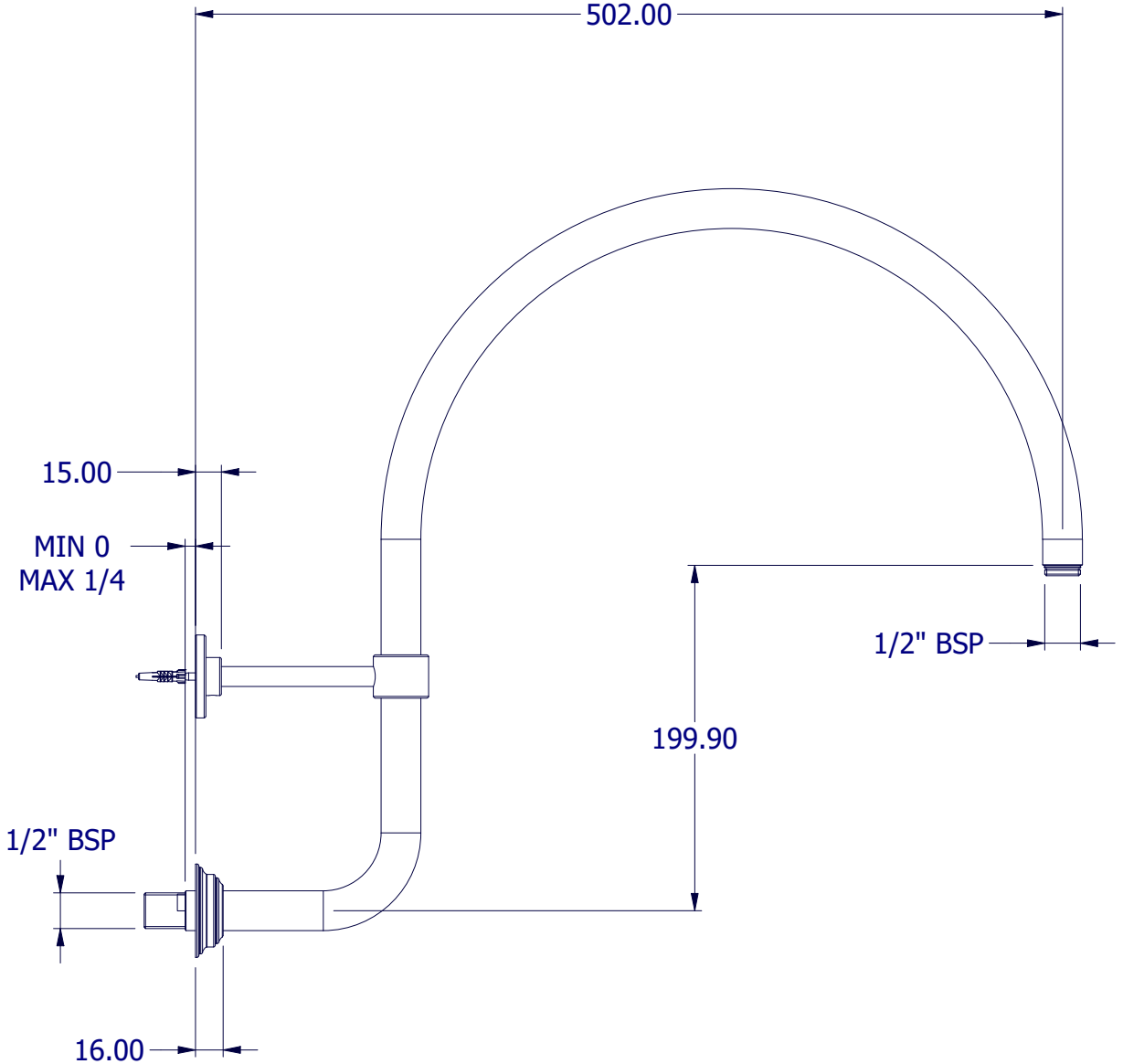

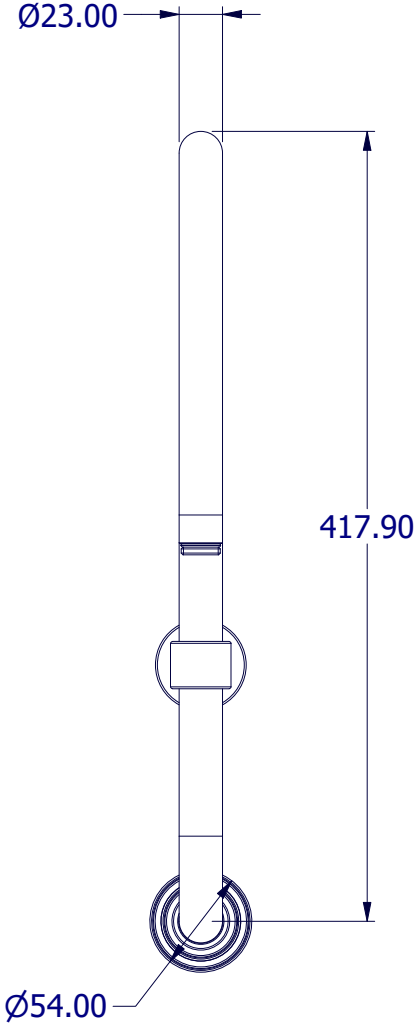

PROPERTY OF SAMUEL HEATH ©			DESIGNER		O.REEVES	
A4	DRG No	T50K621-C	ISSUE NO.	A	ISSUE DATE	22/06/26