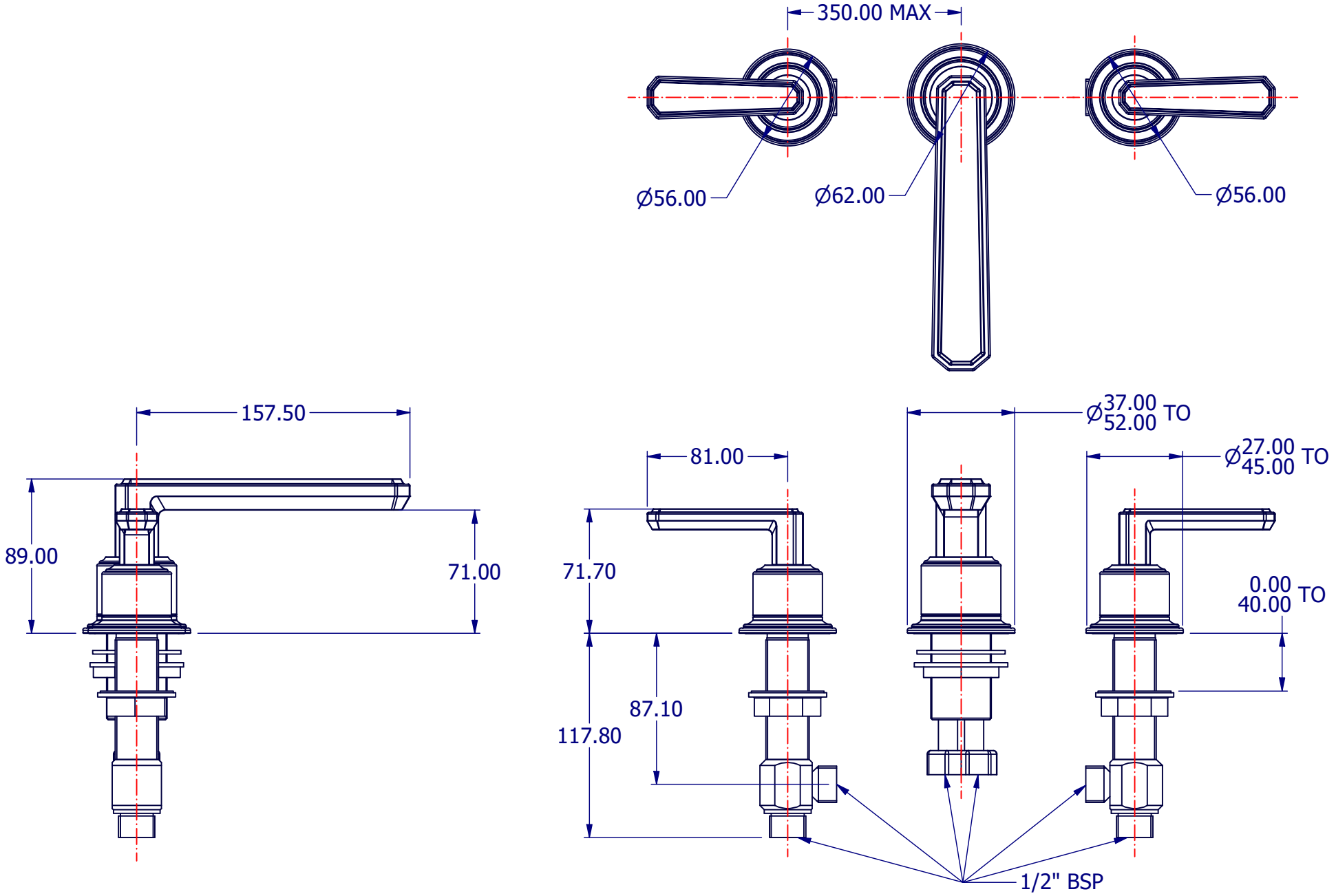

PROPERTY OF SAMUEL HEATH ©			DESIGNER		C.DANKS	
A4	DRG No	T50K14L	ISSUE NO.	A	ISSUE DATE	04/08/25