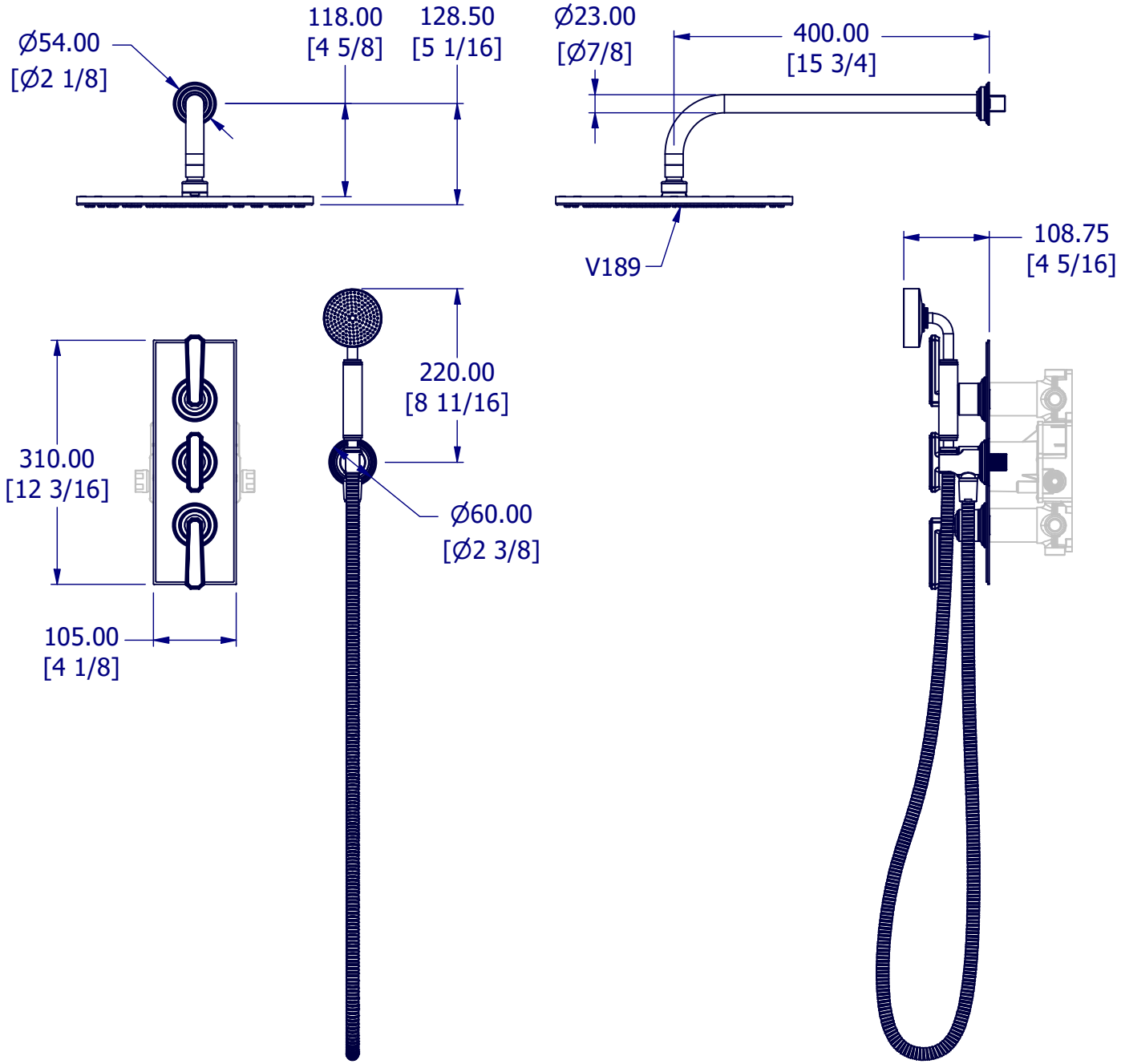

PROPERTY OF SAMUEL HEATH ©			DESIGNER		C.DANKS	
A4	DRG No	T50B2L14 / T50B2AL14	ISSUE NO.	A	ISSUE DATE	15/10/25