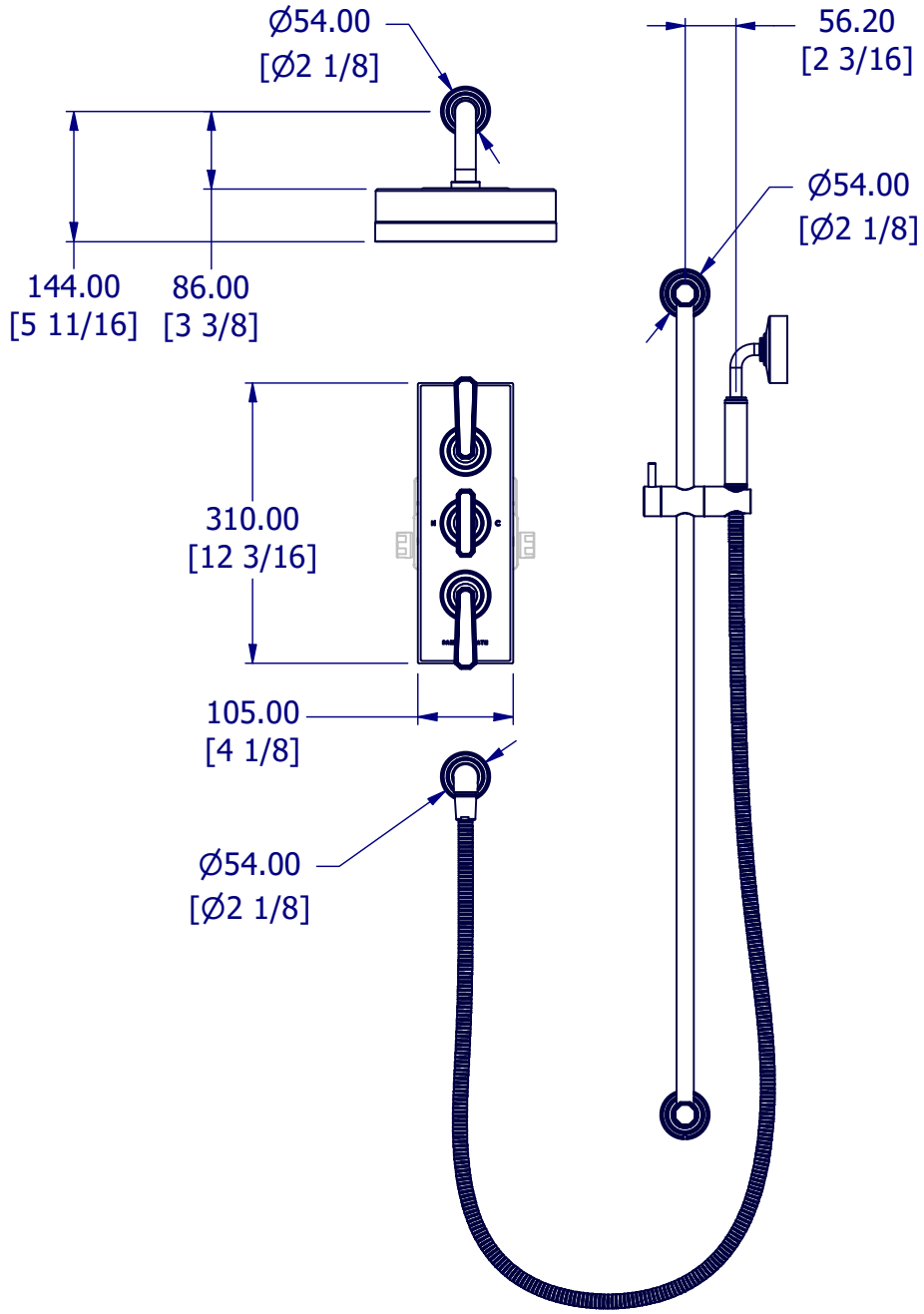

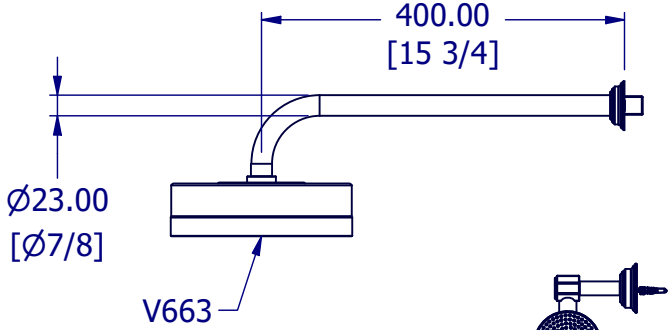

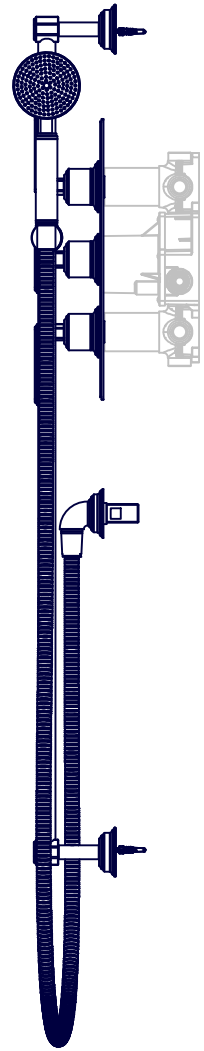

PROPERTY OF SAMUEL HEATH ©			DESIGNER		C.DANKS	
A4	DRG No	T50B1L09 / T50B1AL09	ISSUE NO.	A	ISSUE DATE	24/10/25