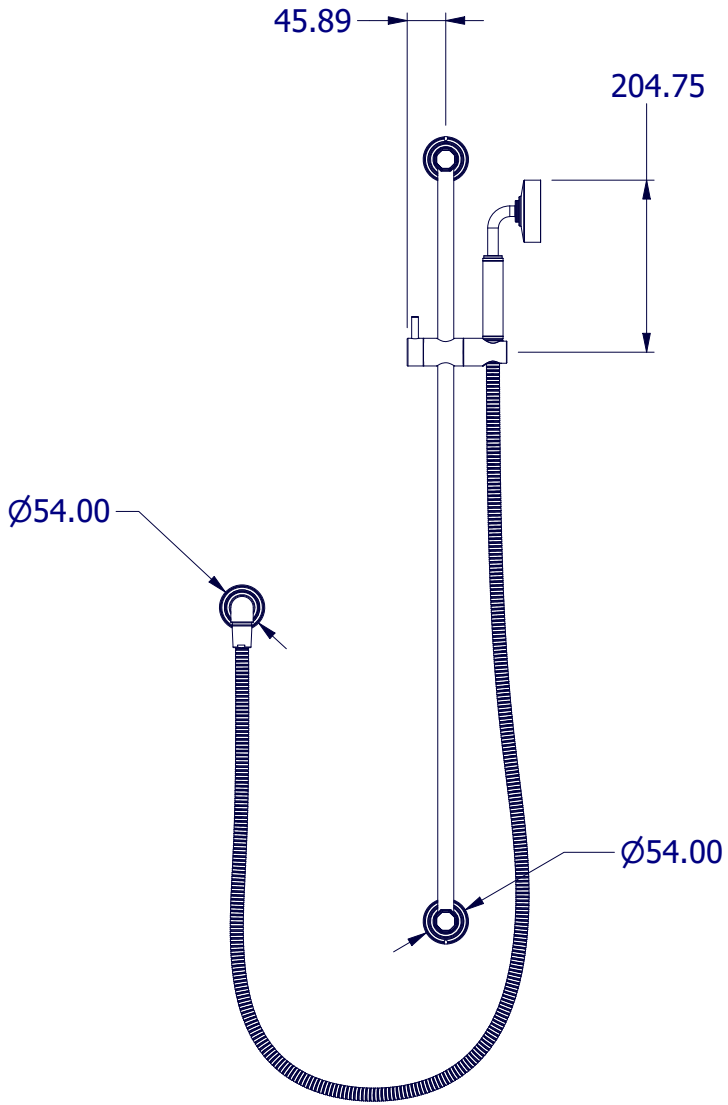

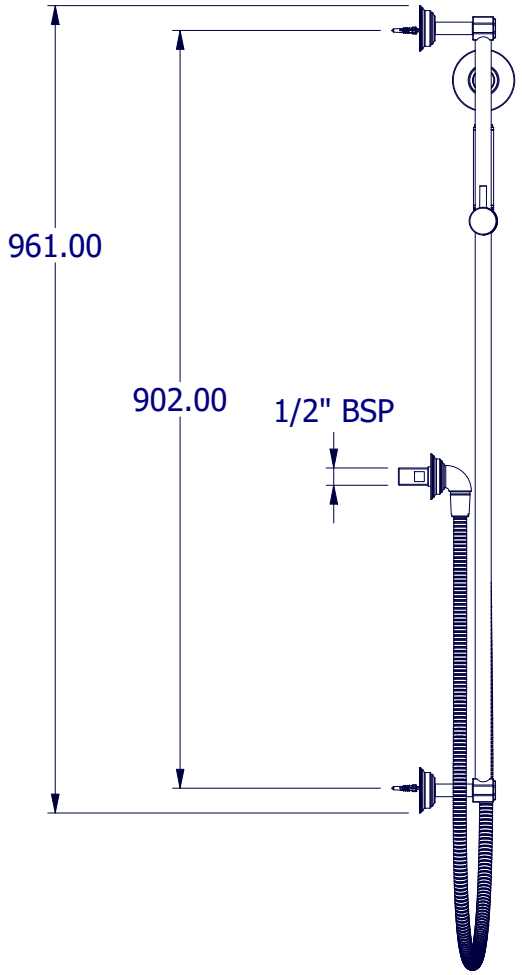

PROPERTY OF SAMUEL HEATH ©

			DESIGNER		O.REEVES	
A4	DRG No	T5070-KIT	ISSUE NO.	A	ISSUE DATE	09/12/25