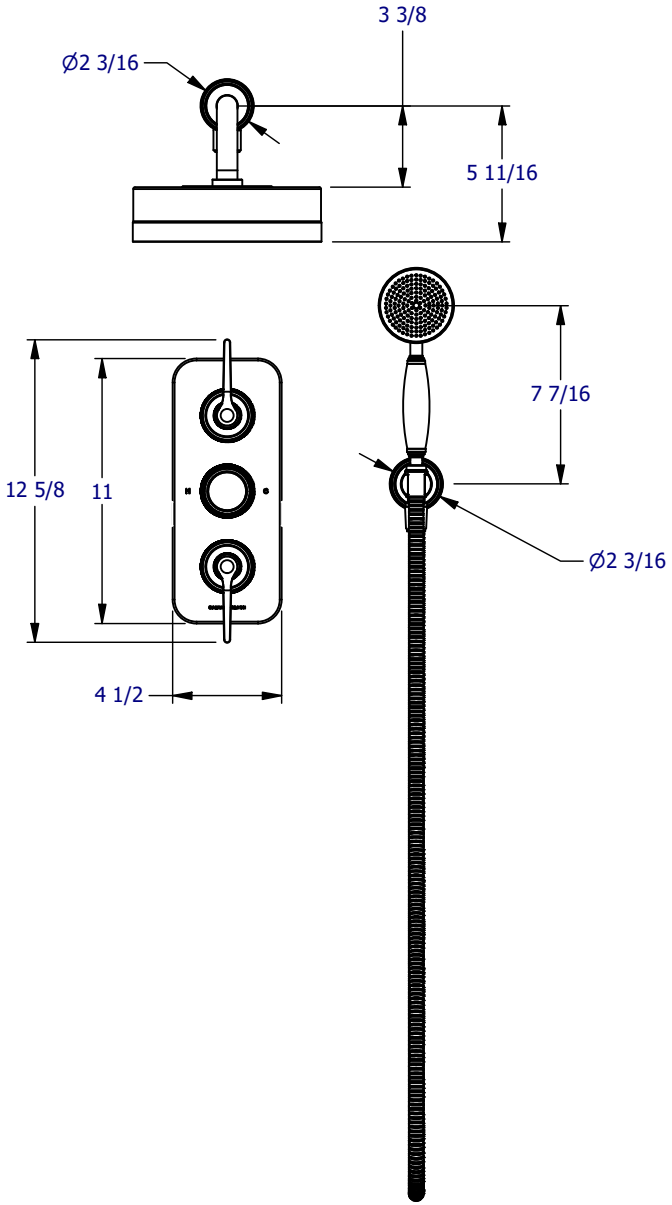

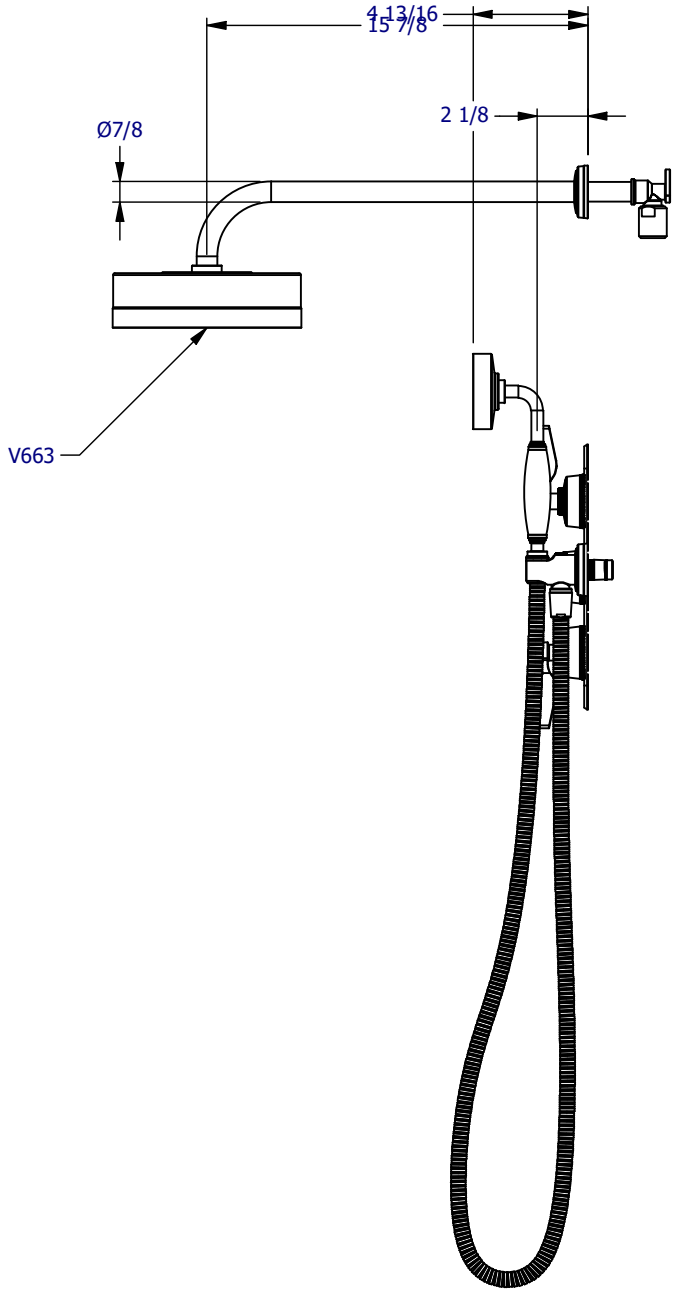

PROPERTY OF SAMUEL HEATH ©			DESIGNER		C.DANKS	
A4	DRG No	T11B2ALA	ISSUE NO.	A	ISSUE DATE	22/09/26