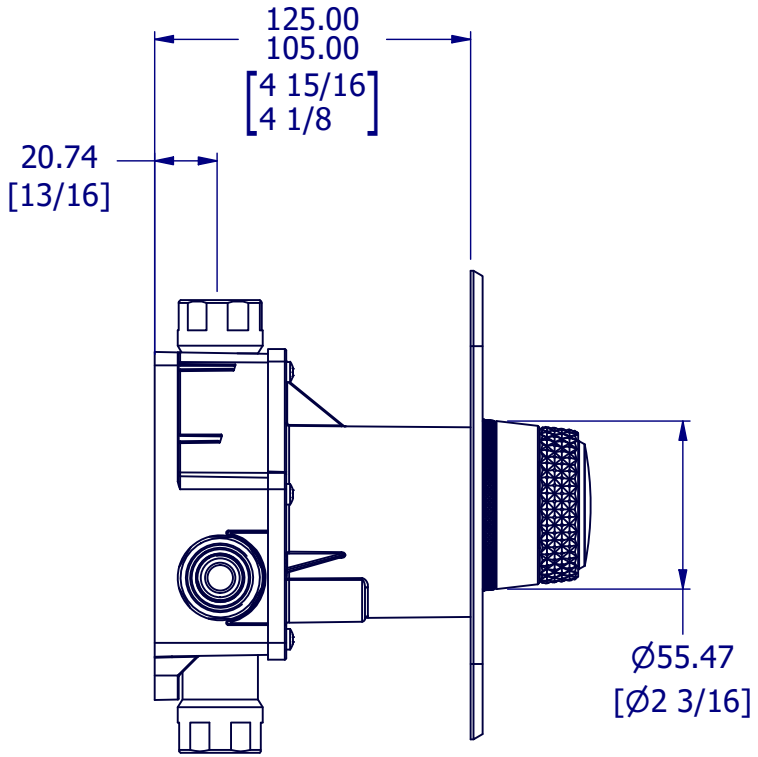

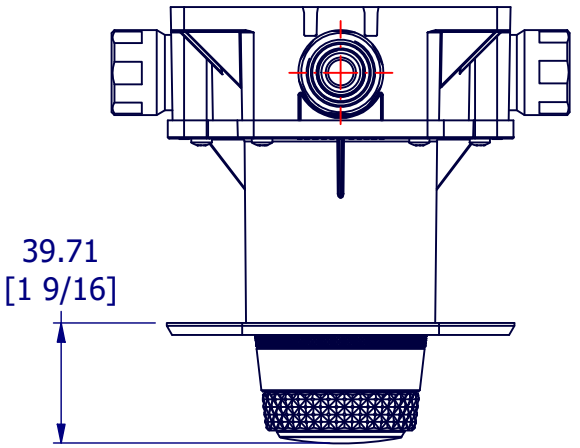

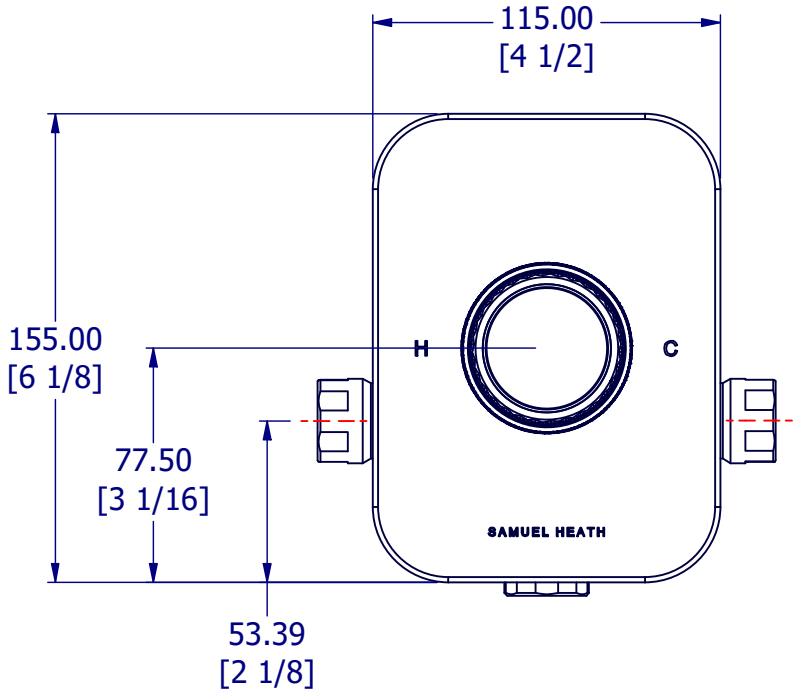

PROPERTY OF SAMUEL HEATH ©			DESIGNER		S.WHIELDON	
A4	DRG No	T1101-TCCR/CBR	ISSUE NO.	A	ISSUE DATE	25.1.26