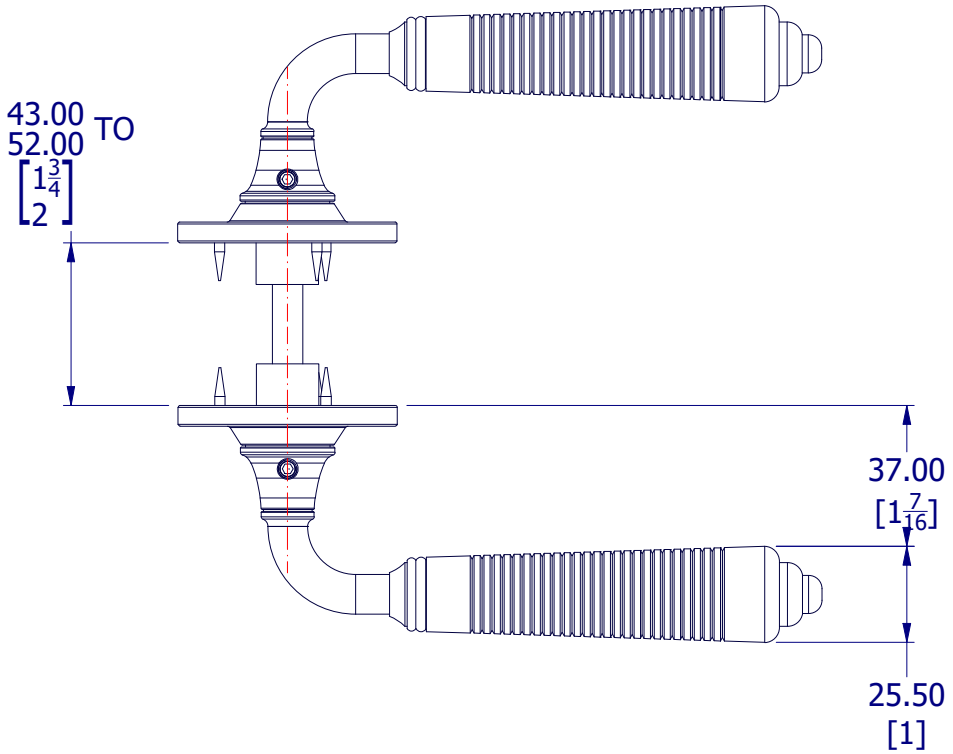

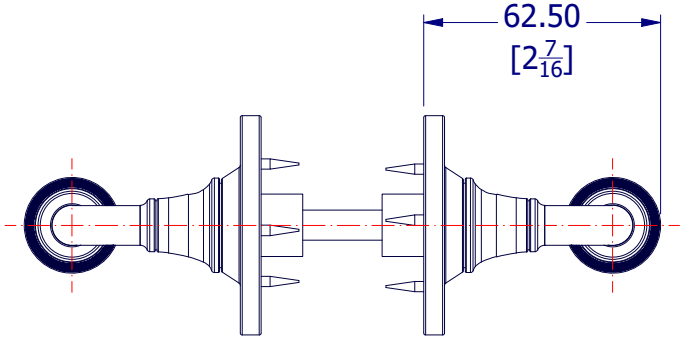

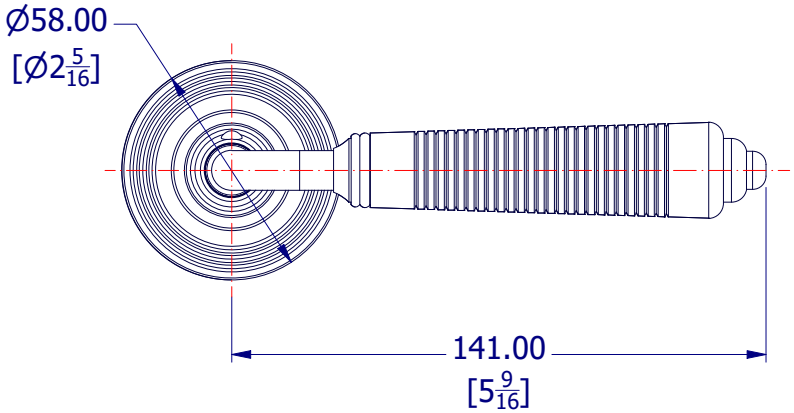

P9949-XX EXTENDED SPINDLE AVAILABLE

PROPERTY OF SAMUEL HEATH ©			DESIGNER		K.WHIELDON	
A4	DRG No	PK6974-BR57	ISSUE NO.	A	ISSUE DATE	19/03/25