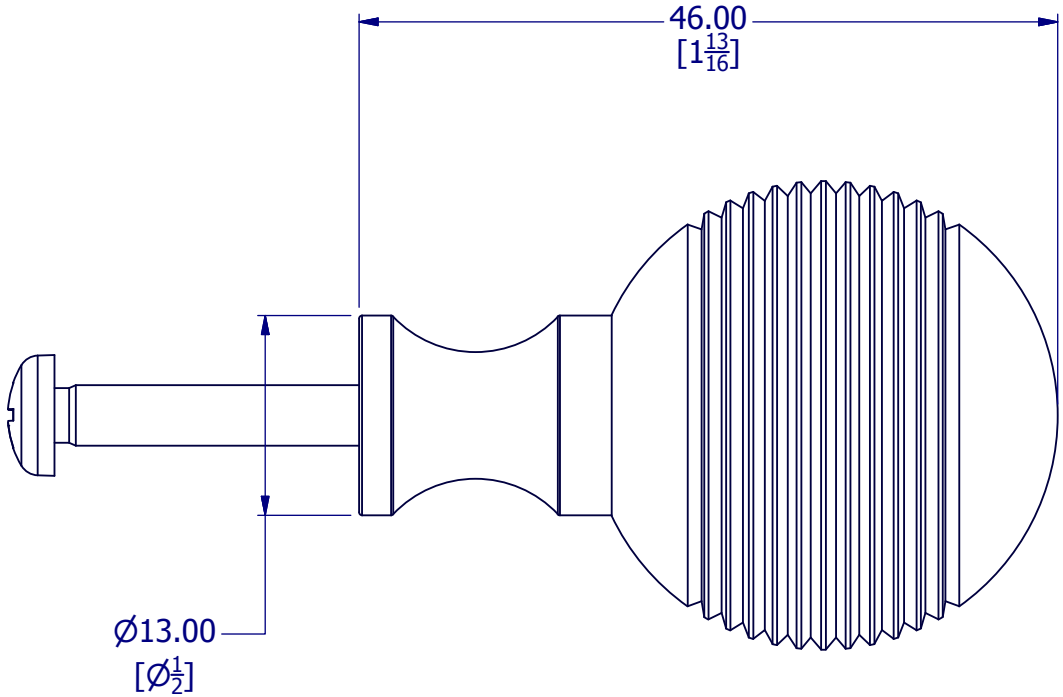

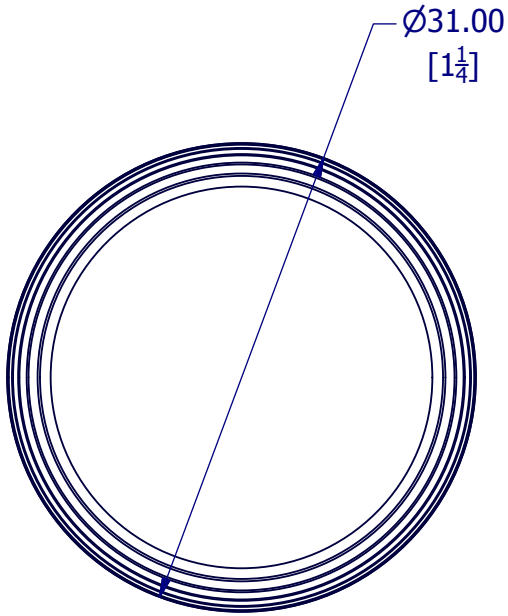

PROPERT OF SAMUEL HEATH ©			DESIGNER		R.CLARKE	
A4	DRG No	P787-C	ISSUE NO.	A	ISSUE DATE	14/08/18