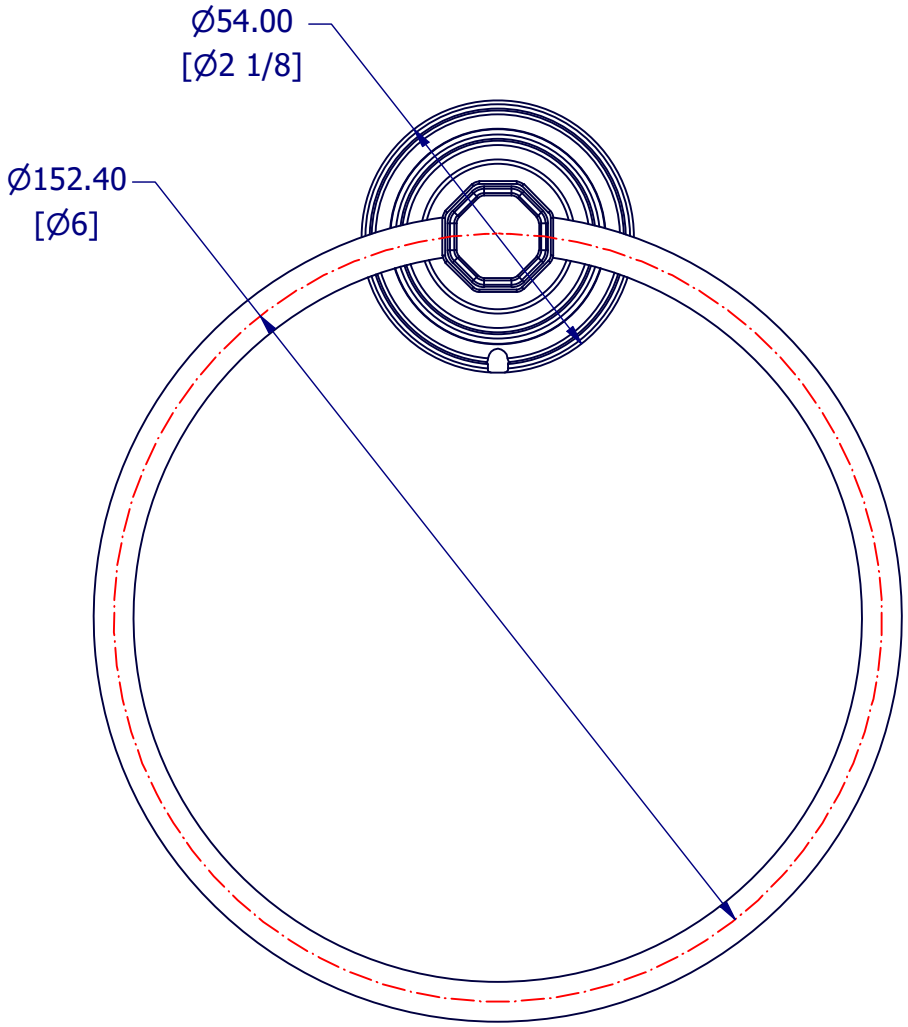

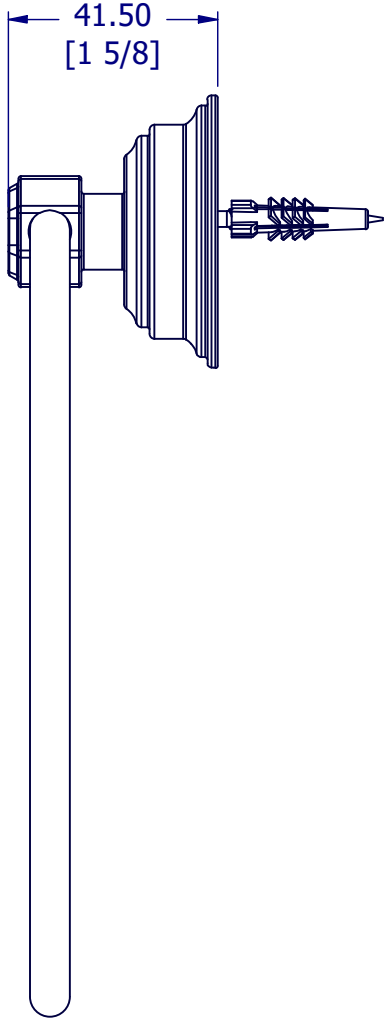

PROPERTY OF SAMUEL HEATH ©			DESIGNER		C.DANKS	
A4	DRG No	N1698-6	ISSUE NO.	A	ISSUE DATE	27/11/25