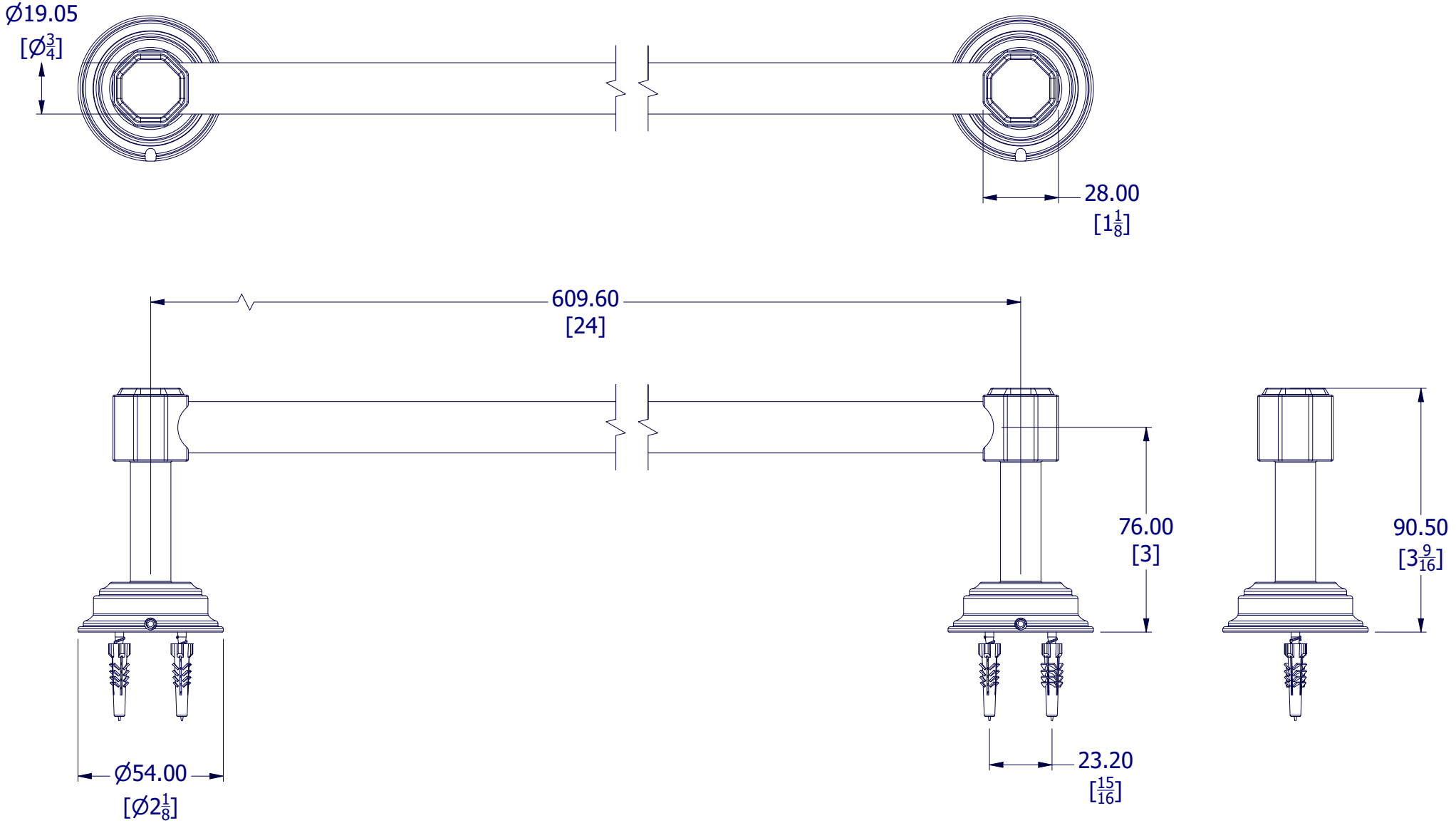

PROPERTY OF SAMUEL HEATH ©			DESIGNER		O.REEVES	
A4	DRG No	N1655-A	ISSUE NO.	A	ISSUE DATE	08/12/25