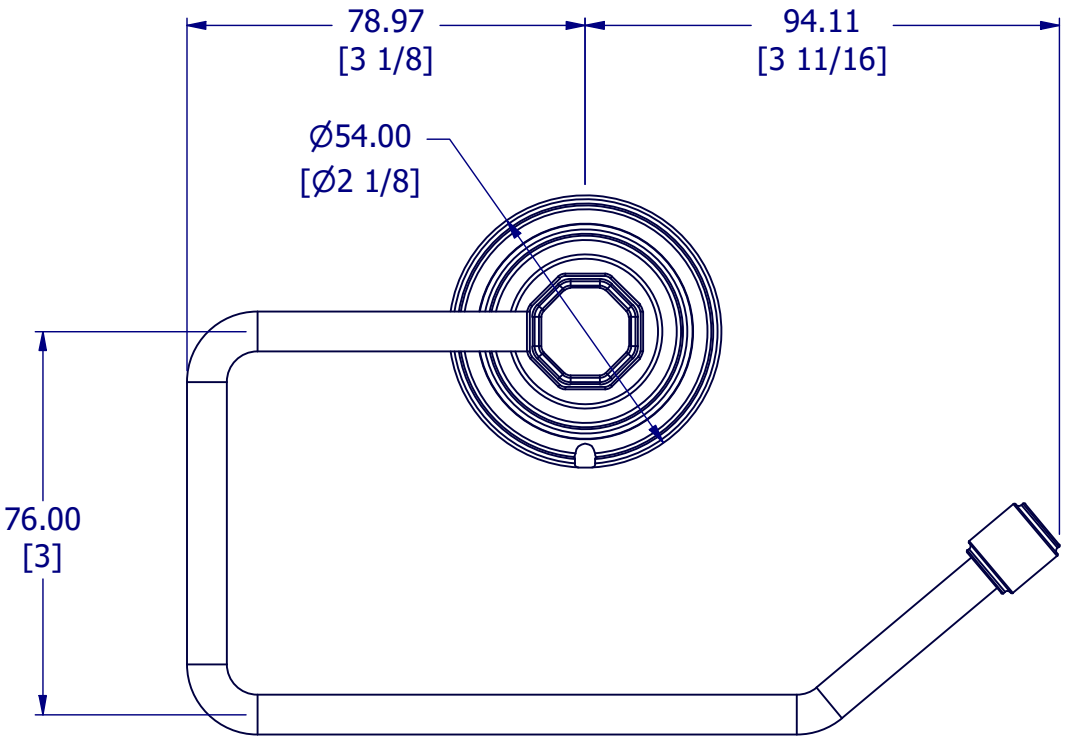

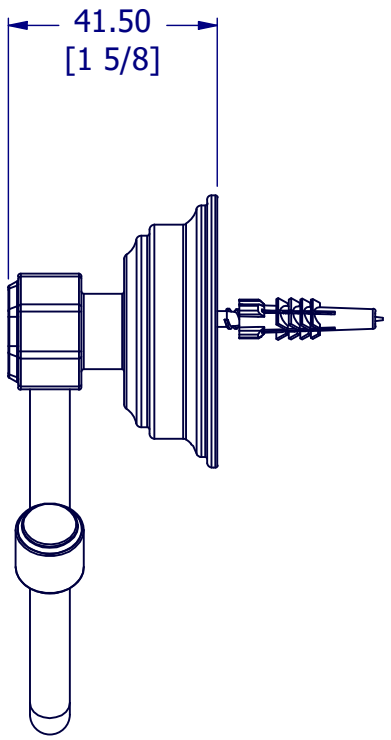

PROPERTY OF SAMUEL HEATH ©			DESIGNER		C.DANKS	
A4	DRG No	N1637	ISSUE NO.	A	ISSUE DATE	24/11/25