SAMUEL HEATH

Product Data Sheet

Bathroom Accessories (Single Chassis Fixing)



N1632



N1637



N1698-6 6” Ring



N1698-6 8” Ring

Dimension Key
N1632

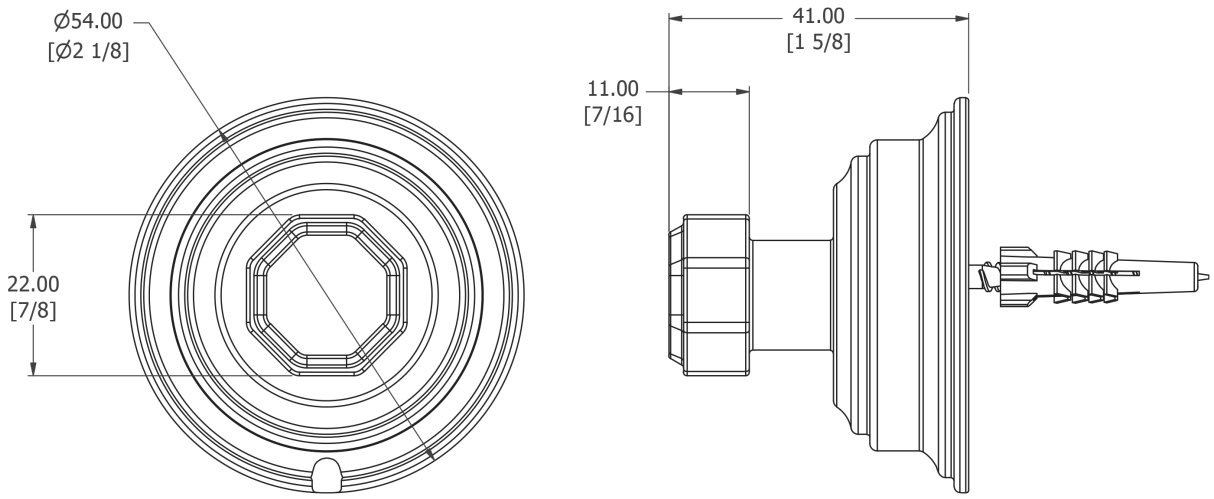

N1637

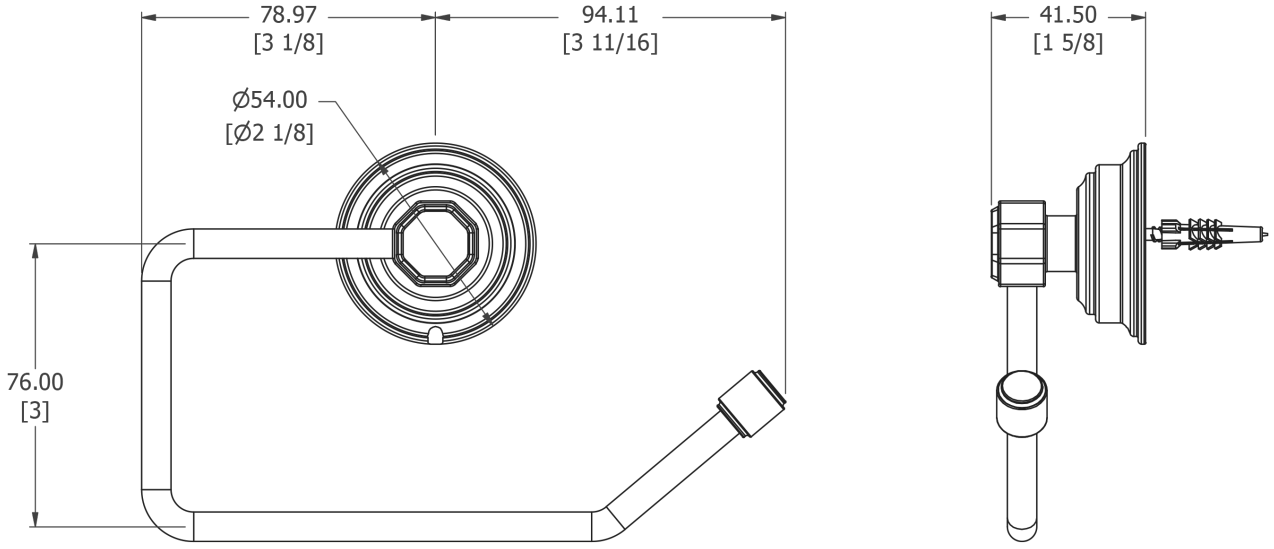

Dimension Key
N1698-6

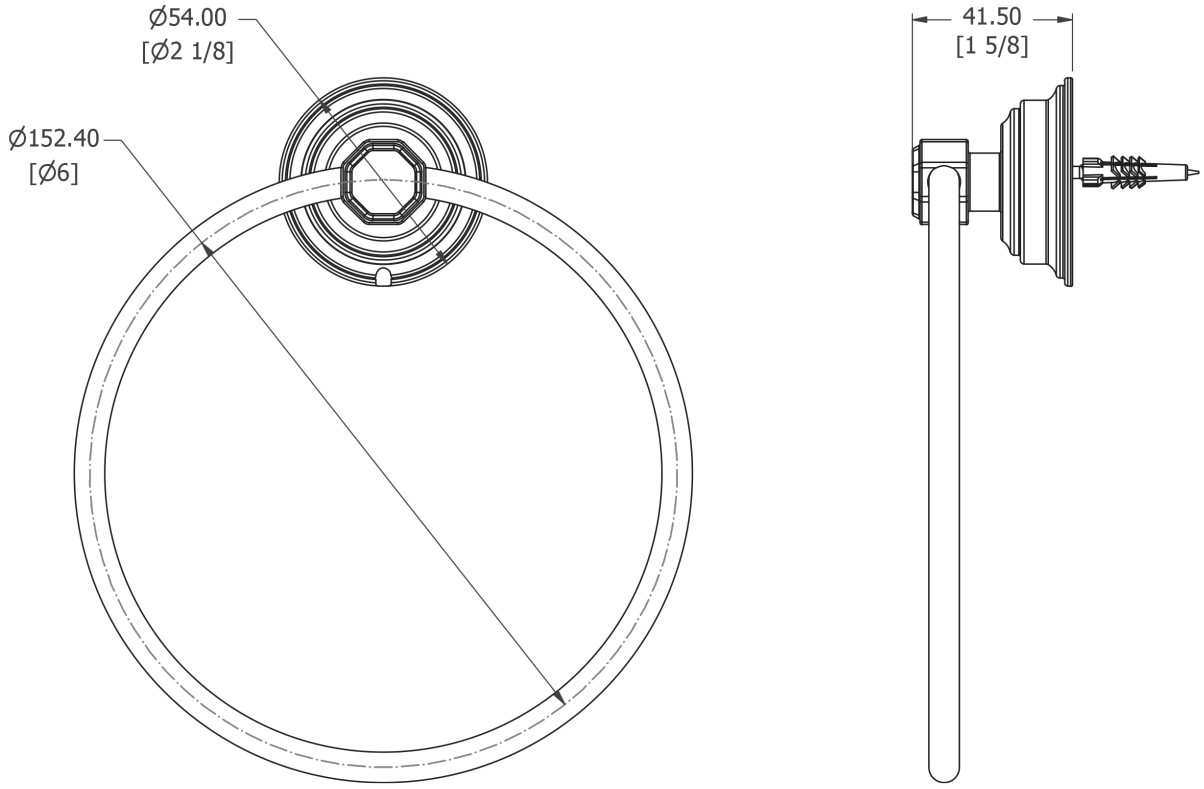

N1698-8

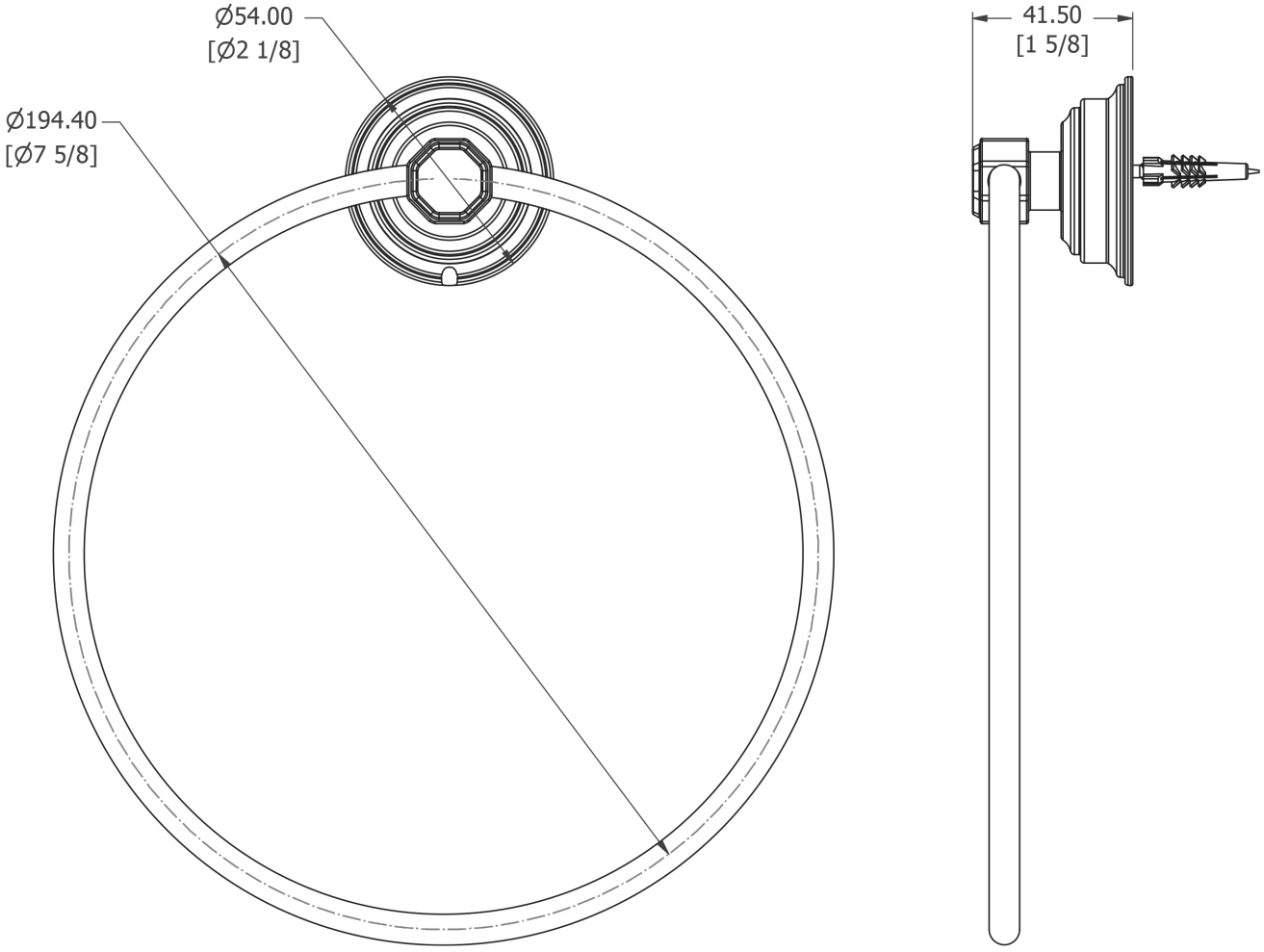

Safety Note

Prior to drilling into walls:
Check there are no hidden electrical wires, cables or water supply pipes with the aid of an electronic detector.

Note: Wall plugs supplied are only suitable for solid stone / brick walls. For plasterboard walls use specialist wall plugs. Seek advice from a specialist about the suitability of fixings to be used.

Installation

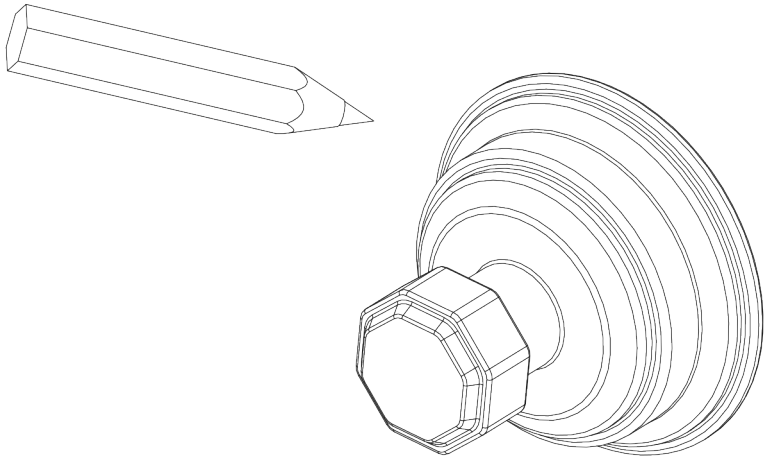

1. Mark rose centers to ensure correct distance between roses (ref. dimensions).

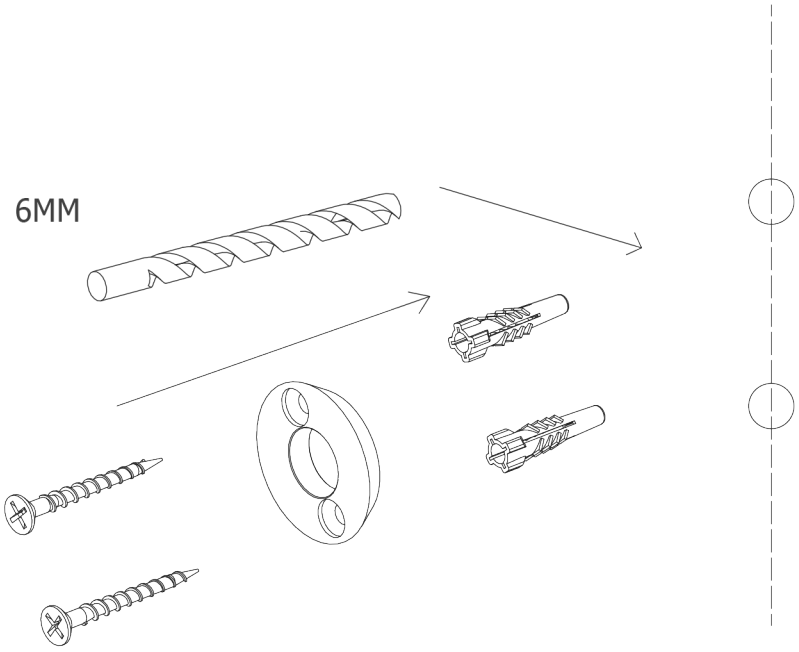

2. Position & fix wall plates to wall.

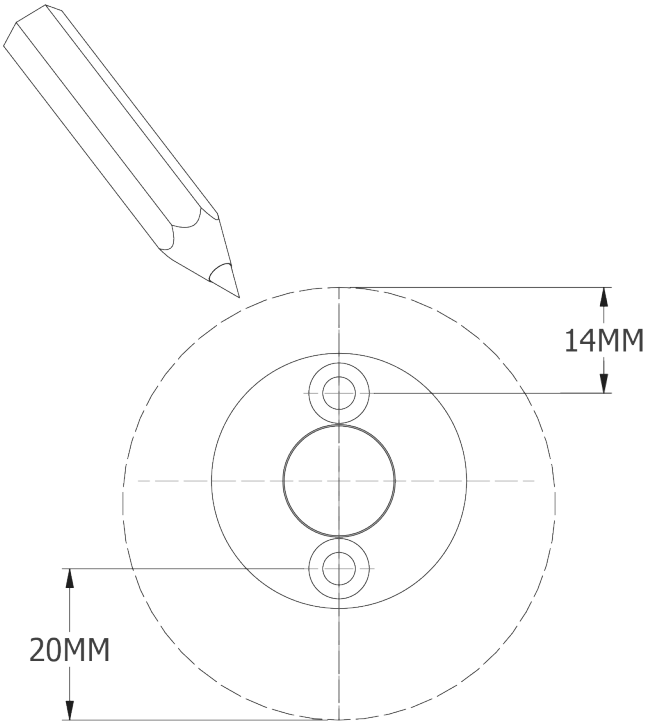

IMPORTANT NOTES

To help maintain the high quality finish please clean with a soft damp cloth. Do not use abrasive polish or cleaners. Stains may be removed using diluted washing up liquid.

NOTES IMPORTANTES

Pour conserver la finition de haute qualité, nettoyer avec un chiffon doux et humide. N'employer jamais de la cire et des produits abrasifs. Les tâches peuvent être enlevées à l'aide de liquide vaisselle pur.

WICHTIGE HINWEISE

Um den optimalen Zustand dieses Produktes zu erhalten, wischen Sie es bitte nur mit einem feuchten, weichen Lappen ab. Auf keinen Fall Scheuermittel verwenden. Flecken lassen sich mit unverdünntem Geschirrspülmittel entfernen.

ATENCION

Para ayudar a mantener el acabado de este producto, limpiar con un paño húmedo suave. No se debe emplear productos abrasivos de baño. Las manchas se pueden quitar empleándo liquido lava-vajillas puro.

ATTENZIONE

Per mantenere la finizione di ottima qualità, pulire con un panno soffice e inumidito. Non usare creme lucidanti e materiali abrasivi. Le macchie potranno essere tolte usando del detersivo per piatti puro.

SAMUEL HEATH
Head Office and Customer Service
Leopold Street
Birmingham
England
B12 0UJ

T: +44 (0)121 766 4200

Info@samuel-heath.com
www.samuel-heath.co.uk

US Customer Service
usa@samuel-heath.com
Federal I.D. No. 58-1504682
www.samuel-heath.com

9-3629
Issue: A