SAMUEL HEATH

Product Data Sheet

V6101-T Trim to suit V1133-IS
V6102-T Trim to suit V1111-IS, V1112-IS, V1134-IS
V6102-T Trim to suit V1132-IS, V1135-IS
V6105-T Trim to suit V1132-IS, V1135-IS

V6101-TM

V6102-TM

V6103-TM

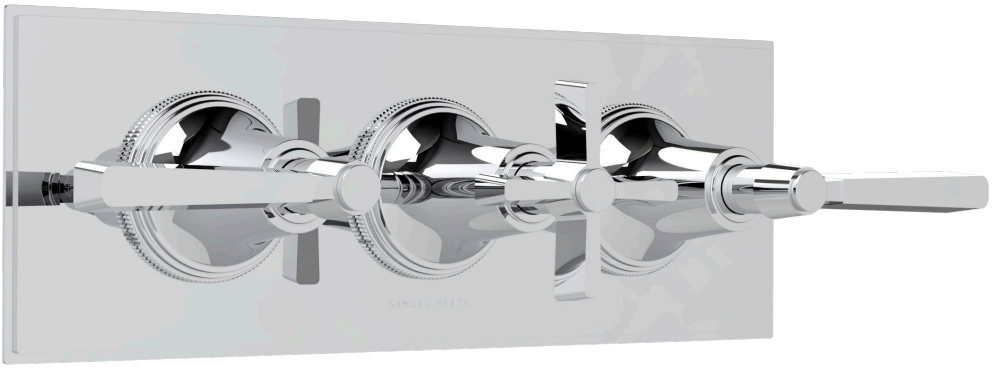

V6105-TM

Control Options

M

MB

X

XB

CCR

BCR

L

CCQ

BCQ

Dimension Key
V6101-TM

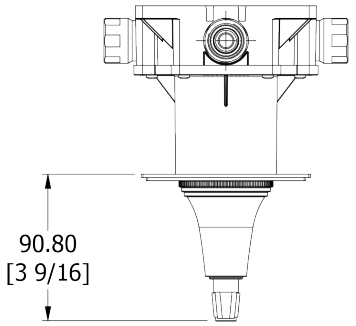

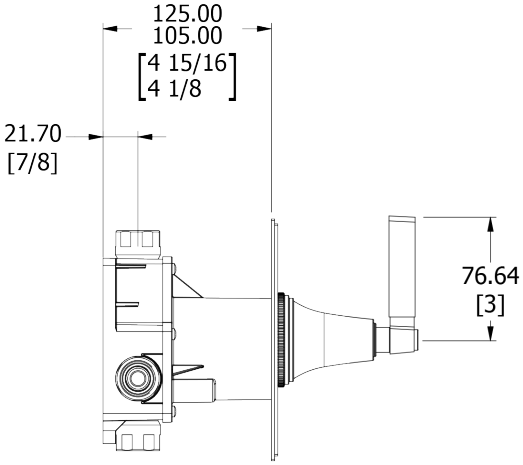

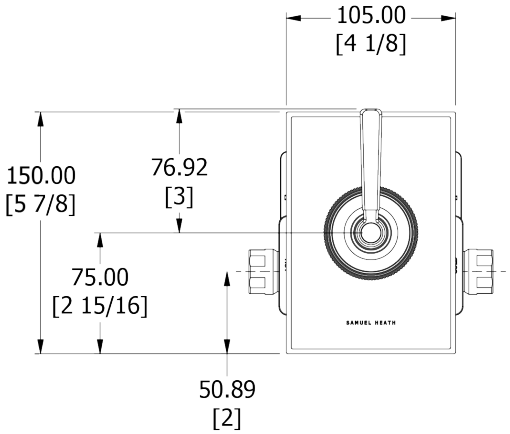

Dimension Key
V6102-TM

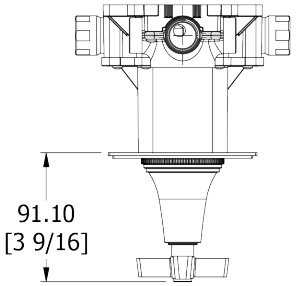

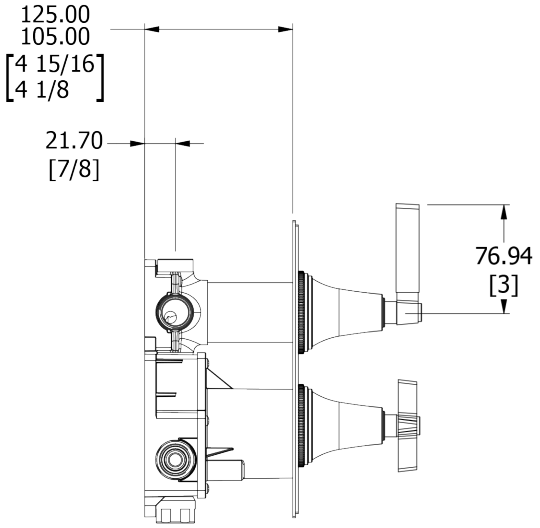

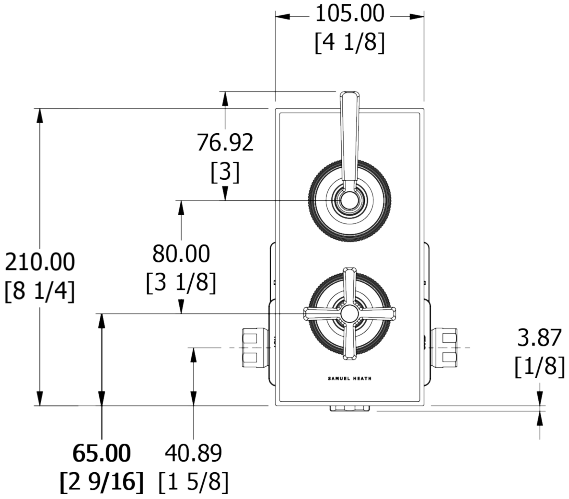

For additional lever dimensions, see website.

Dimension Key
V6103-TM

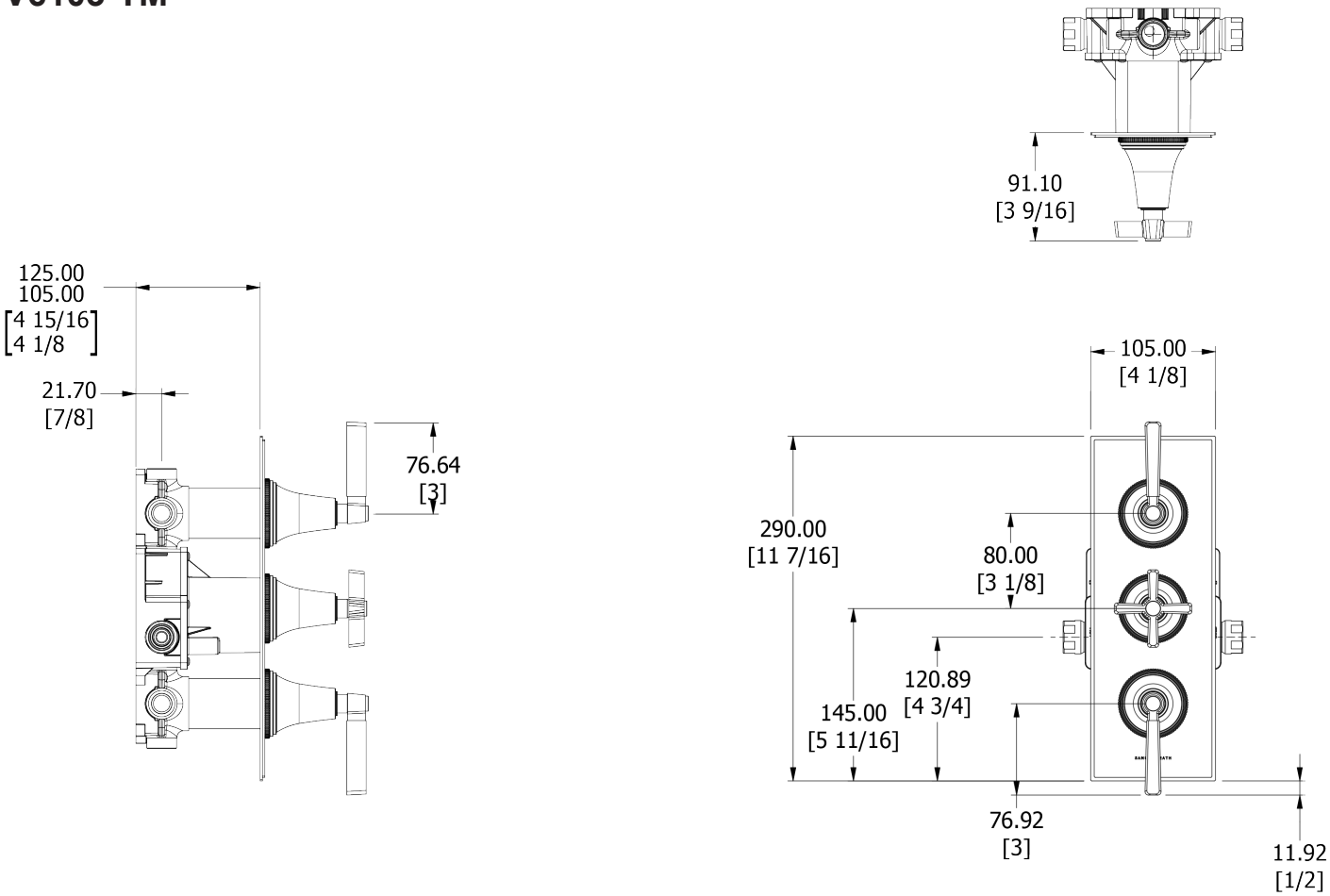

Dimension Key
V6105-TM

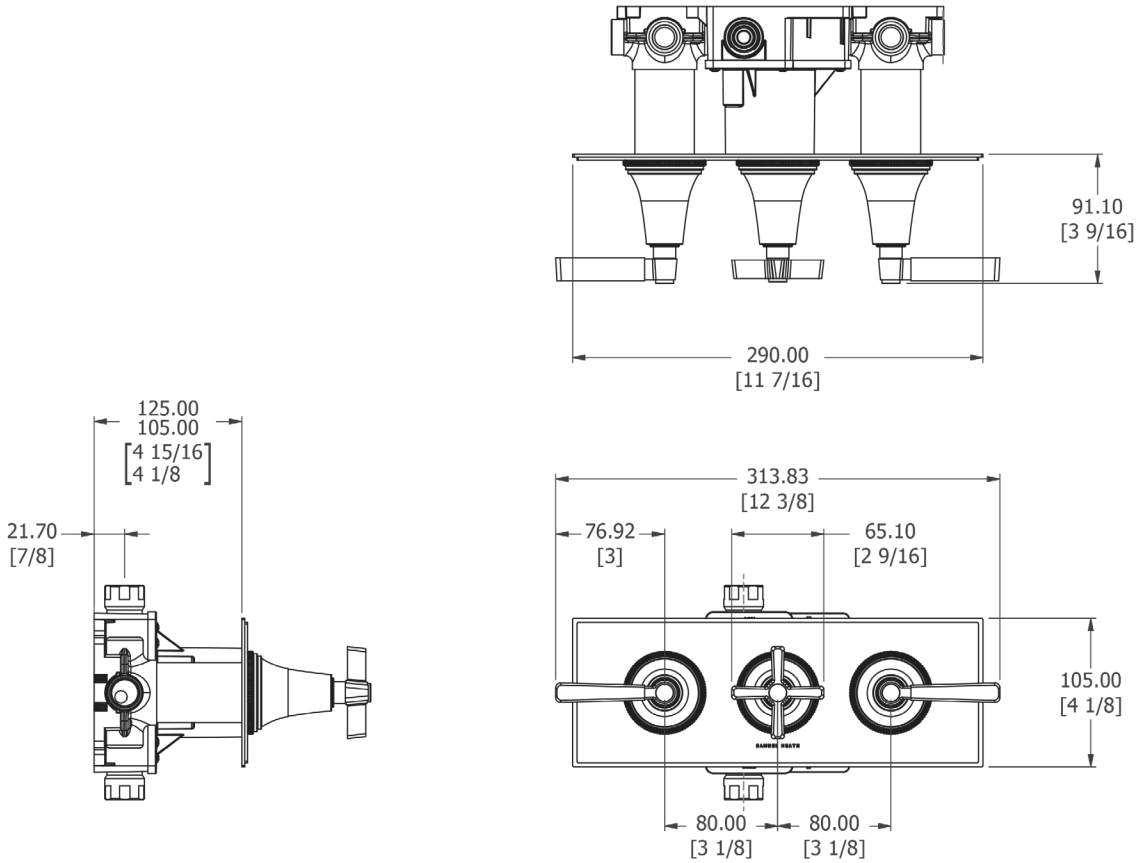

For additional lever dimensions, see website.

Spares Information
T6101-TM

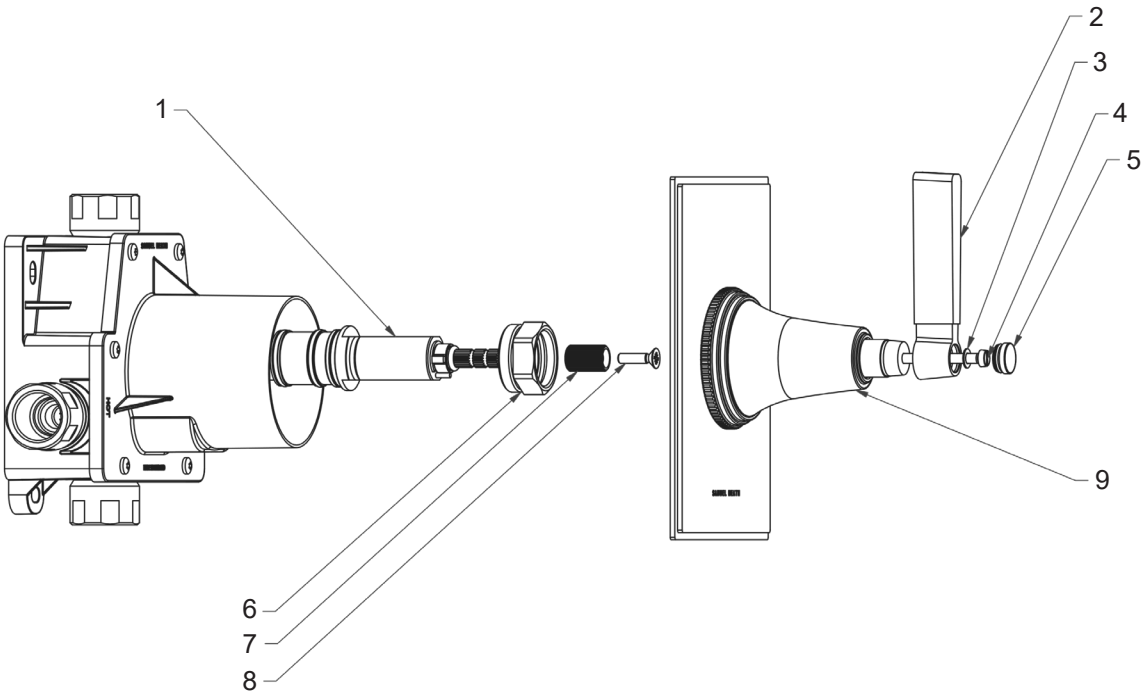

Item	Part No.	Description
1	VS50809	Thermostatic Cartridge
2	-	Control Handle
3	-	Locking Washer
4	-	Screw
5	-	Indice
6	-	Thermo Lock Nut
7	-	Thermo Spline Adaptor
8	-	Thermo Screw
9	-	Thermo Control

Spares Information
V6102-TM

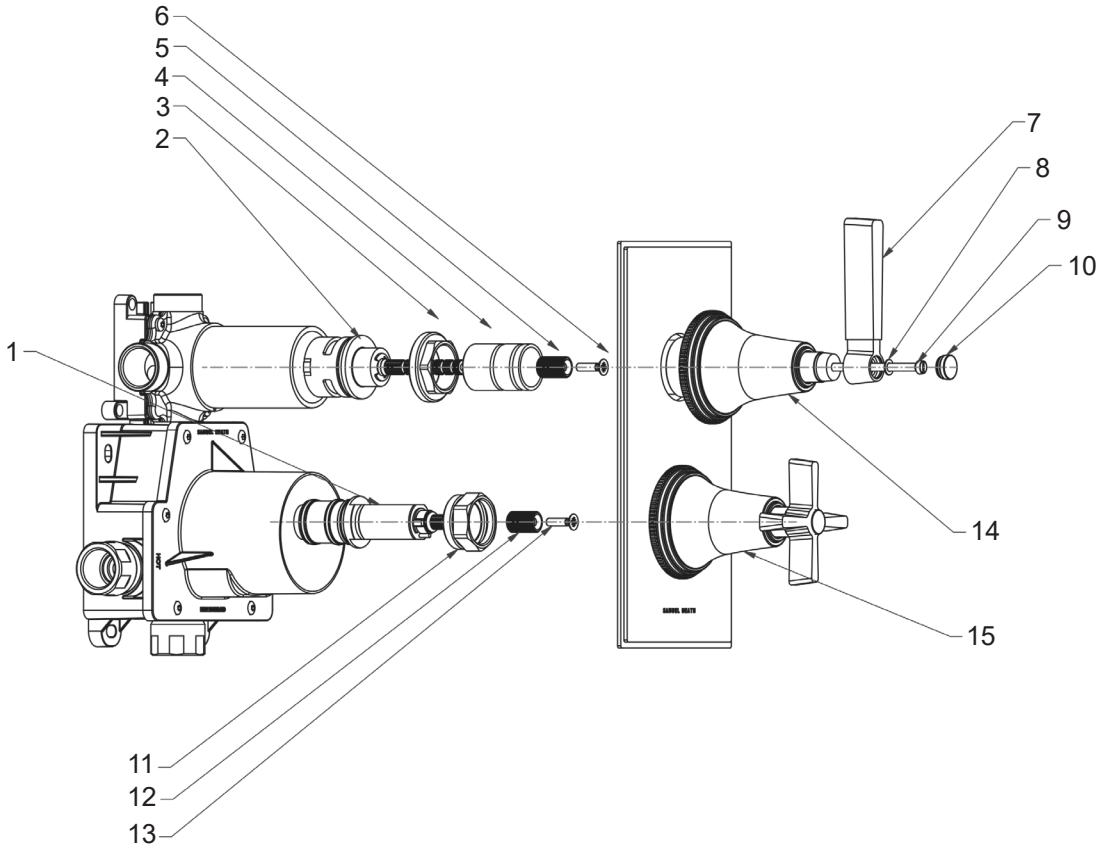

Item	Part No.	Description	Item	Part No.	Description
1	VS50809	Thermostatic Cartridge	7	-	Control Handle
2	VS50814-1 Volume	Control Cartridge	8	-	Locking Washer
			9	-	Screw
	VS50814-2 2 Way Diverter		10	-	Indice
	VS50814-3 3 Way Diverter		11	-	Thermo Lock Nut
			12	-	Thermo Spline Adaptor
3	-	Volume Lock Nut	13	-	Thermo Screw
4	-	Threaded Shank	14	-	Volume Control
5	-	Volume Spline Adaptor	15	-	Thermo Control
6	-	Volume Screw			

Spares Information
V6103-TM/ V6105-TM

Note: For V6105 the V6103 is Horizontal

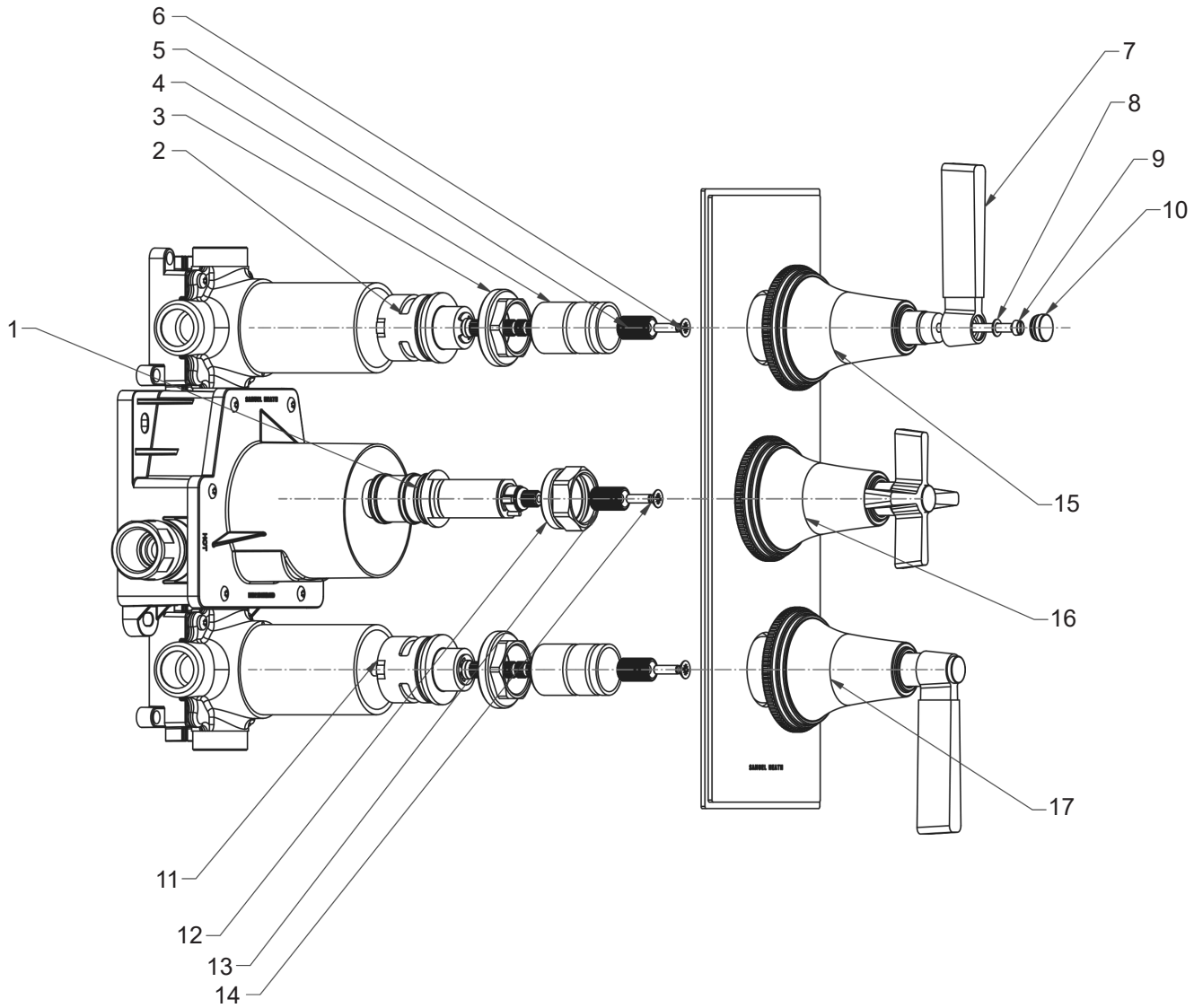

Item	Part No.	Description	Item	Part No.	Description
1	VS50809	Thermostatic Cartridge	9	-	Screw
2	VS50814-1 Volume	Control Cartridge	10	-	Indice
	VS50814-2 2 Way Diverter		11	VS50814-1 Volume	Control Cartridge
3	-	Voume Lock Nut	12	-	Thermo Lock Nut
4	-	Threaded Shank	13	-	Thermo Spline Adaptor
5	-	Volume Spline Adaptor	14	-	Thermo Screw
6	-	Volume Screw	15	-	Volume Control
7	-	Control Handle	16	-	Thermo Control
8	-	Locking Washer	17	-	Volume Control

Installation

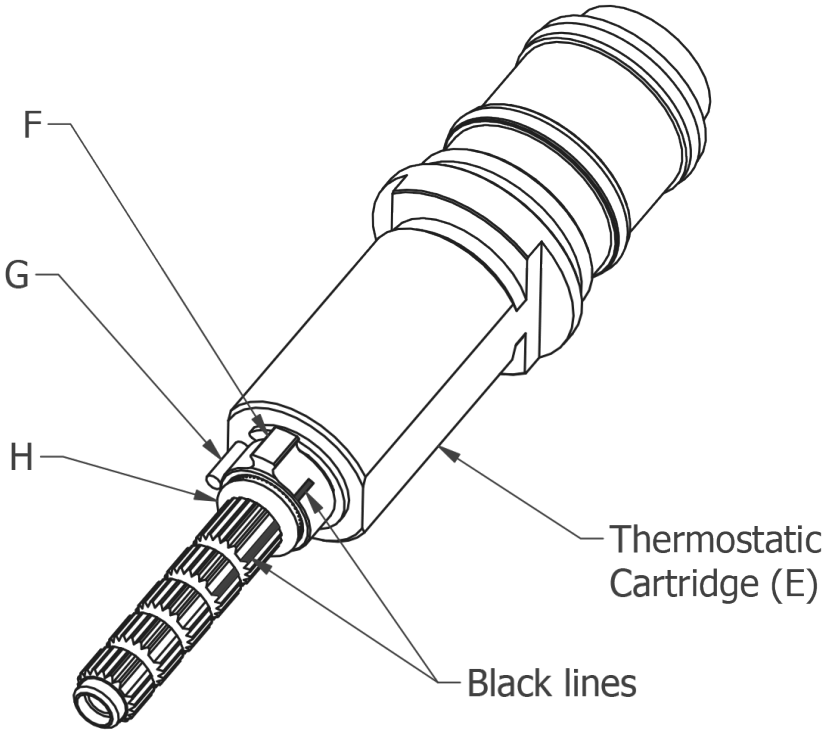

Thermostatic Cartridge Information

• The thermostatic cartridge has been calibrated to 38 degrees Celcius during assembly, when the two black lines on the thermostatic cartridge line up, this is the set point.

• PLEASE NOTE - incoming water temperatures vary between different installations. During installation, the plumber should use a thermometer to re-calibrate the minimum and maximum temperature.

• The temperature is limited by the rotating collar (F) and the stop pin (G). To change the temperature at the maximum and minimum point, slide o-ring (H) and rotating collar (F) forward and rotate the position of the rotating collar (F) relative to the stop pin (G).

NOTE: Rotate the rotating collar (H) clockwise to make the water hotter, and anticlockwise to make the water colder.

WARNING: It is not recommended to exceed a safety limit stop of 37.8 degrees Celcius/100 degrees Fahrenheit.

Installation

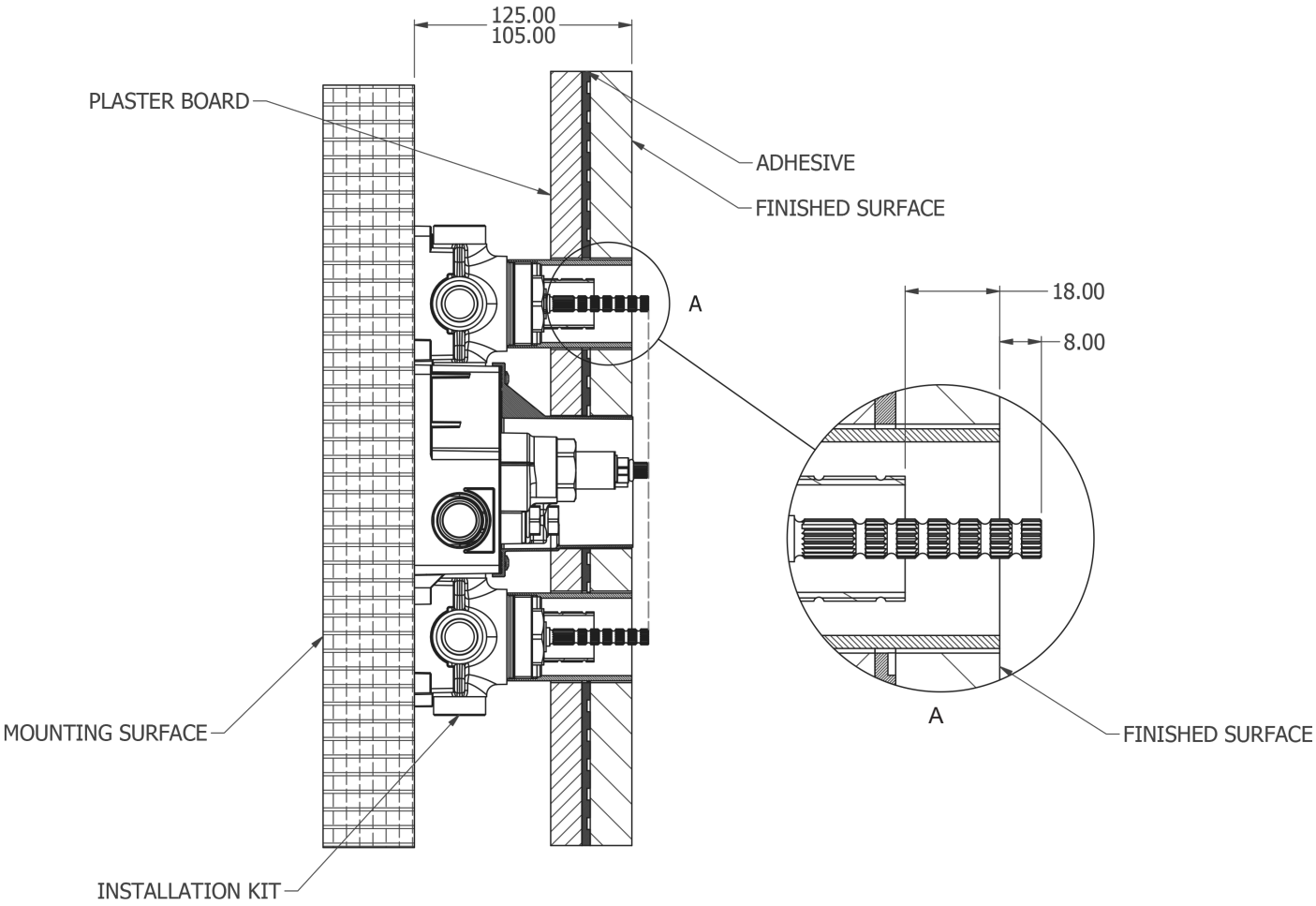

1. The thermostatic cartridge (A) requires its length reduced to the dimensions shown from the finished wall surface.

Installation

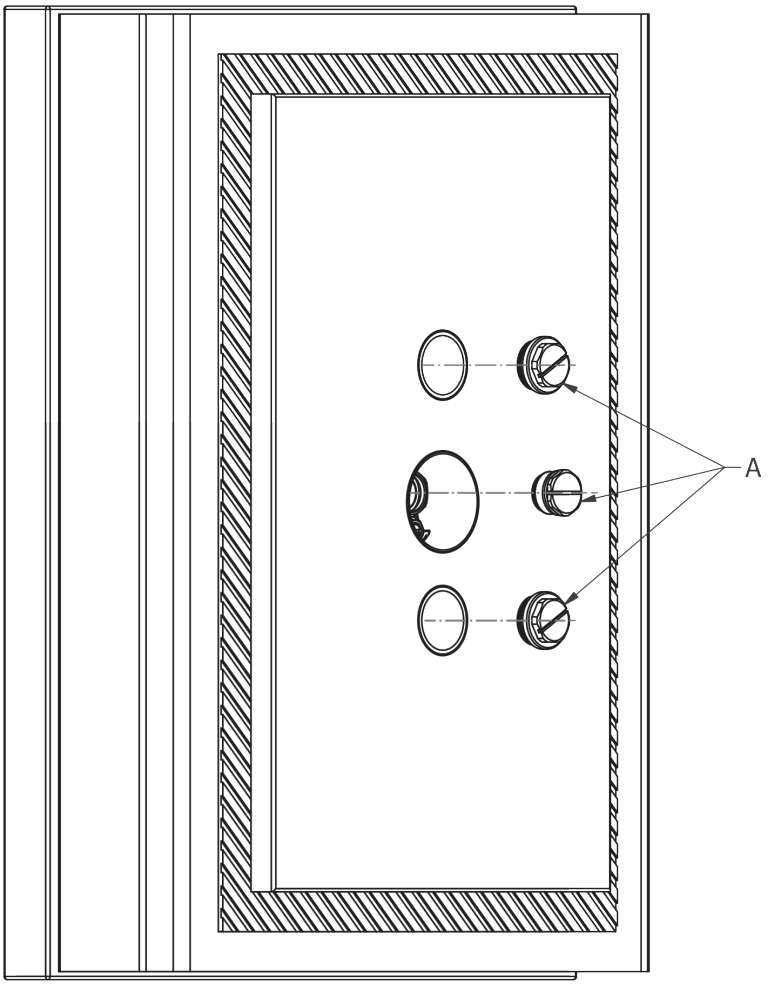

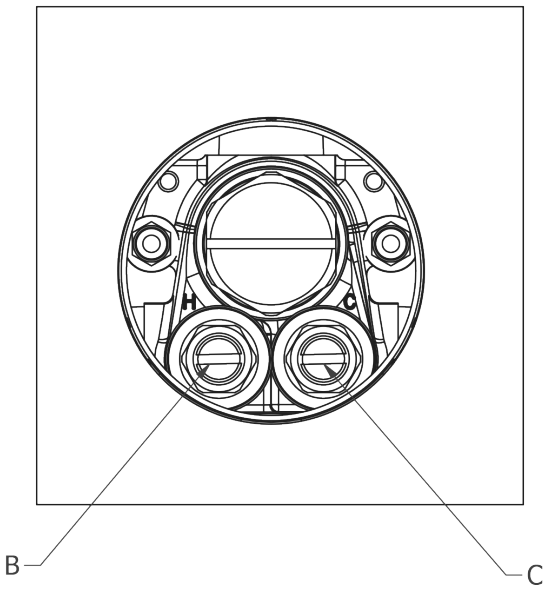

Installation:

1. Remove blanking plugs (A) from the Valve.

Note: The water inlets can be isolated by turning the flat head screw clockwise on the hot service cartridge (B), and cold service cartridge (C).

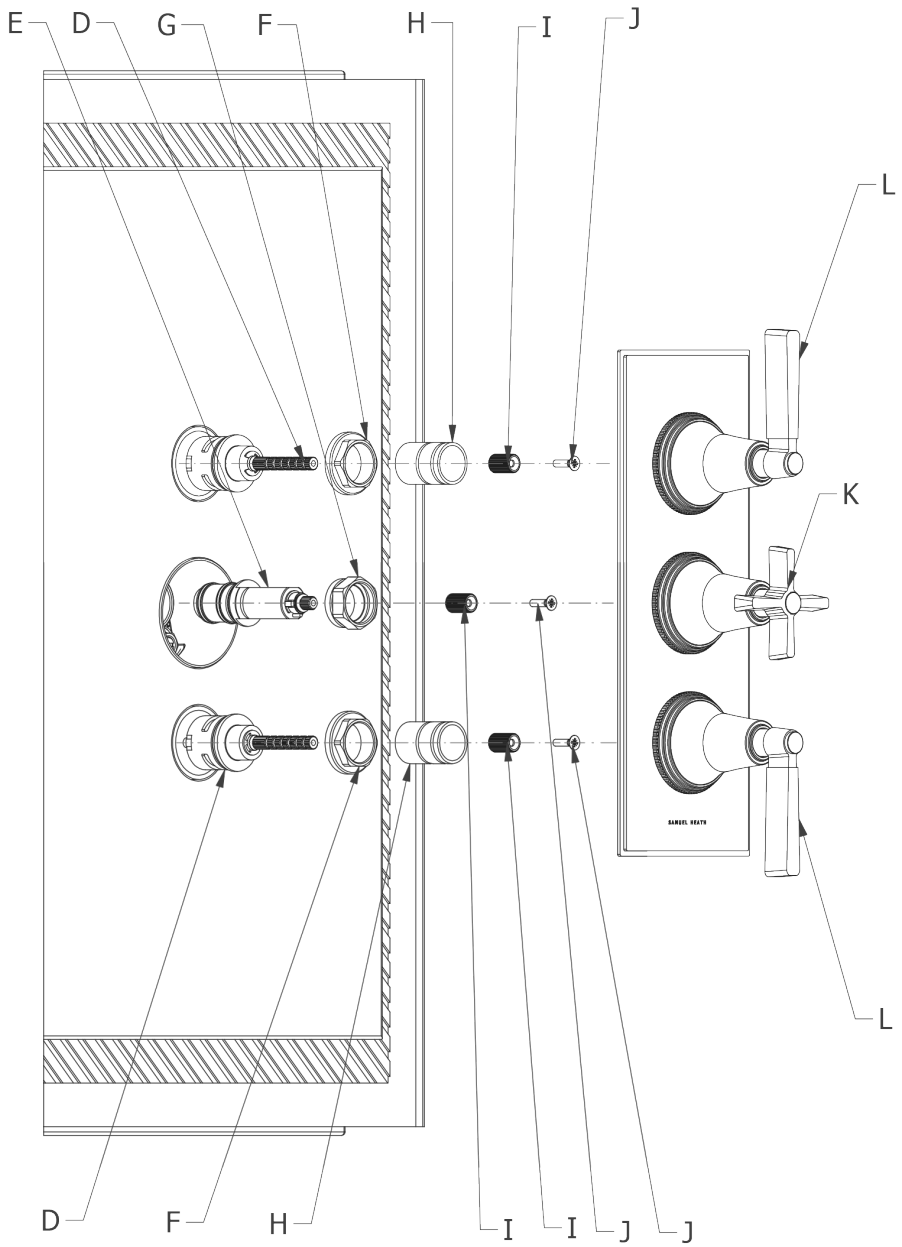

Note: Items D, E, and H must be cut down to achieve the projections shown in the booklet.

2. Install the volume/diverter cartridges (D), and thermostatic cartridge (E) into the valve. Secure these in place using locking nuts (F and G).

3. Assemble the spline adaptors (I) to the volume/ diverter cartridges, and secure using screws (J).

4. Assemble the thread collars (H).

5. Push the shower plate and thermo control assembly (K) onto the shower valve. Apply a suitable silicon sealant between the shower plate and finished surface.

6. Assemble the volume/diverter control trims (L) to the valve.

IMPORTANT NOTES

1. Installation should be carried out by a competent engineer, in accordance with water regulations.
2. Before installation ensure supply pipes are flushed clean as debris or loose particles will affect the effiency of the ceramic disc cartridge.
3. For mixer taps it is recommended that hot & cold pressures are equally balanced.
4. To help maintain the high quality finish please clean with a soft damp cloth. Do not use abrasive polish or cleaners. Stains may be removed using diluted washing up liquid.
5. Ceramic cartridges in hard water areas. To prolong the lifespan and reduce servicing periods of your Samuel Heath tap we recommend that a suitable water softener be fitted. Consult your installer/designer for details.
6. Please note that as with all tap and shower ware it will be necessary from time to time for the products to be serviced, this should be carried out by a qualified Plumbing Engineer.

NOTES IMPORTANTES

1. L'installation doit être faite par un ingénieur qualifié, selon les réglements du Service Eau.
2. Avant l'installation, il faut s'assurer que les tuyaux d'approvisionnement sont complètement purgés. Les déchets flottants auront un effet détrimentaire sur l'efficacité de la cartouche céramique.
3. Il est recommandé que les pressions de l'eau chaude et eau froide des mitigeurs et mélangeurs soient maintenues à un niveau égal.
4. Pour conserver la finition de haute qualité, nettoyer avec un chiffon doux et humide. N'employer jamais de la cire et des produits abrasifs. Les tâches peuvent être enlevées à l'aide de liquide vaisselle pur.
5. Cartouches en céramique dans les régions à eau calcaire. Pour prolonger la durée et réduire l'entretien de votre robinetterie Samuel Heath, nous recommandons d'utiliser un adoucisseur d'eau convenable. Veuillez consulter votre installateur/fournisseur pour plus de renseignements.
6. Veuillez noter qu'un entretien sera nécessaire de temps en temps et doit être effectué par un installateur qualifié.

WICHTIGE HINWEISE

1. Installation sollte durch einen kompetenten Fachmann und nach den üblichen Vorschriften ausgeführt werden.
2. Vor Installation Wasserleitung gründlich durchspülen. Verschmutzung wird die Funktion der Kartusche erheblich einschränken.
3. Für Mischbatterien ist es wichtig, daß Wasser mit gleichem Druck eingefuhrt wird.
4. Um den optimalen Zustand dieses Produktes zu erhalten, wischen Sie es bitte nur mit einem feuchten, weichen Lappen ab. Auf keinen Fall Scheuermittel verwenden. Flecken lassen sich mit unverdünntem Geschirrspülmittel entfernen.
5. Keramikkartuschen in Hartwasserbereichen. Um die Lebensdauer zu verlängern und Wartungszeiten zu reduzieren empfiehlt Samuel Heath den Einsatz eines geeigneten Wasserenthärters. Fragen Sie Ihren Installateur/Designer um Rat.
6. Bitte merken Sie, dass alle Armaturen ab und zu eine Wartung brauchen. Diese soll durch einen kompetenten Installateur ausgeführt werden.

ATENCION

1. La instalación se debe realizar por un fontanero.
2. Antes de la instalación, deben pulgar las tuberias dejándo correr el agua por las tuberias para que arrastren los residuos de montaje/obra, con el motivo de que no afecte la eficacia del cartucho de ceramica.
3. Para grupo baño/ducha se recomienda que las presiones del agua caliente y frio sean equilibradas.
4. Para ayudar a mantener el acabado de este producto, limpiar con un paño húmedo suave. No se debe emplear productos abrasivos de baño. Las manchas se pueden quitar empleándo liquido lava-vajillas puro.
5. Cartuchos cerámicos en áreas de aguas duras . Para prolongar su vida útil y reducir los periodos de reparación de su grifo SamuelHeath recomendamos la instalación de un descalcificador de agua. Consulte a su instalador para más detalles.
6. Igual que con todo tipo de griferia y duchas, de vez en cuando será necesario llevar a cabo una revisión al producto; esto deberia ser realizado por un fontanero calificado.

ATTENZIONE

1. L'impianto deve essere montato da personale tecnico in conformità alle vigenti leggi.
2. Prima dell'installazione assicurarsi che le tubature dell' aqua siano pulite. Detriti o residui di lavorazione compromettono l'efficenza del cartuccio.
3. Per i gruppi, si raccomanda che le pressioni acqua calda e acqua fredda siano ugualmente bilanciate.
4. Per mantenere la finizione di ottima qualità, pulire con un panno soffice e inumidito. Non usare creme lucidanti e materiali abrasivi. Le macchie potranno essere tolte usando del detersivo per piatti puro.
5. Come con tutti i tipi di rubinetti e docce, di volta in volta è necessario effettuare una revisione al prodotto; questo dovrebbe essere fatto da un idraulico qualificato.

SAMUEL HEATH

Head Office and Customer Service
Leopold Street
Birmingham
England
B12 0UJ

T: +44 (0)121 766 4200

Info@samuel-heath.com
www.samuel-heath.co.uk

US Customer Service
usa@samuel-heath.com
www.samuel-heath.com

8-40783
Issue: A