SAMUEL HEATH

Product Data Sheet

T2020-1/ T2020-2/ T2020-120/ T2020-140/ T2020-A-1/ T2020-A-2 2 Hole Basin/ Lavatory Filler

- Available Control Options (Other Spout Sizes Also Available) -

T2020-1CTL	T2020-1CTR	T2020-2CTL	T2020-2CTR
T2020-120CTL	T2020-120CTR	T2020-140CTL	T2020-140CTR

Dimension Key
T2020-CTL

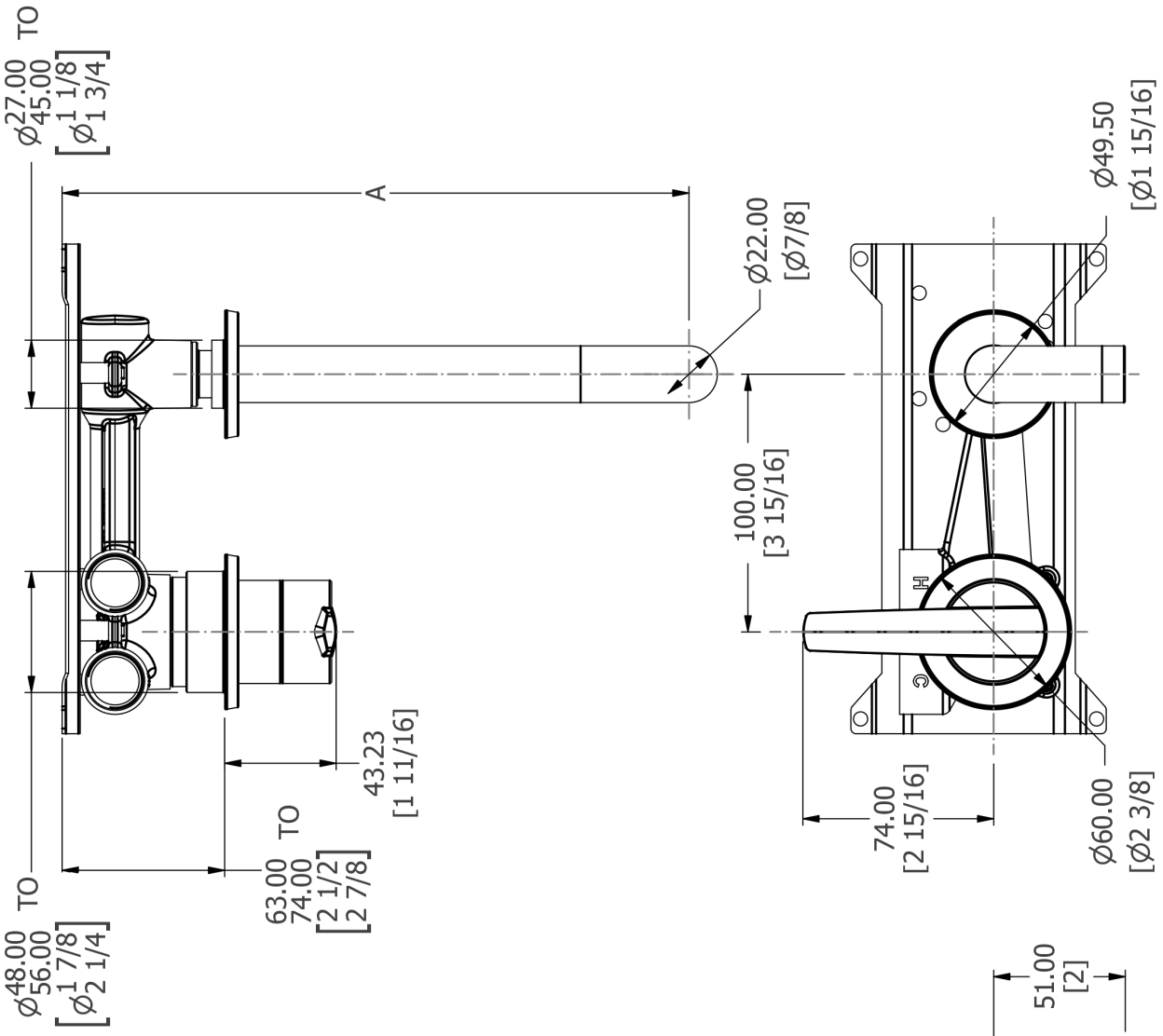

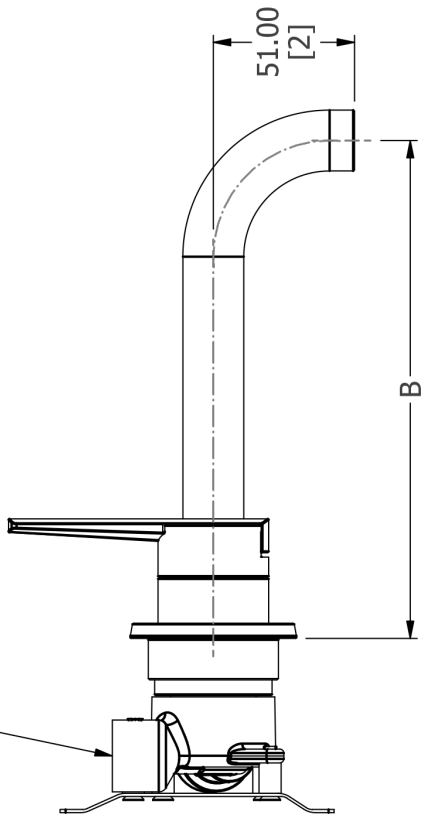

SEE INSTALLATION KIT DRAWING
UK & EU - T2020-IS-XX
US - T2020-AIS-XX

SPOUT LENGTHS -

T2020-120
A = 183mm [7 3/16] TO 194mm [7 5/8]
B = 120mm [4 3/4]

T2020-140
A = 203mm [8] TO 214mm [8 7/16]
B = 140mm [5 1/2]

T2020-1
A = 243mm [9 9/16] TO 254mm [10]
B = 180mm [7 1/16]

T2020-2
A = 263mm [10 3/8] TO 274mm [10 13/16]
B = 200mm [7 7/8]

Dimension Key
T2020-CTR

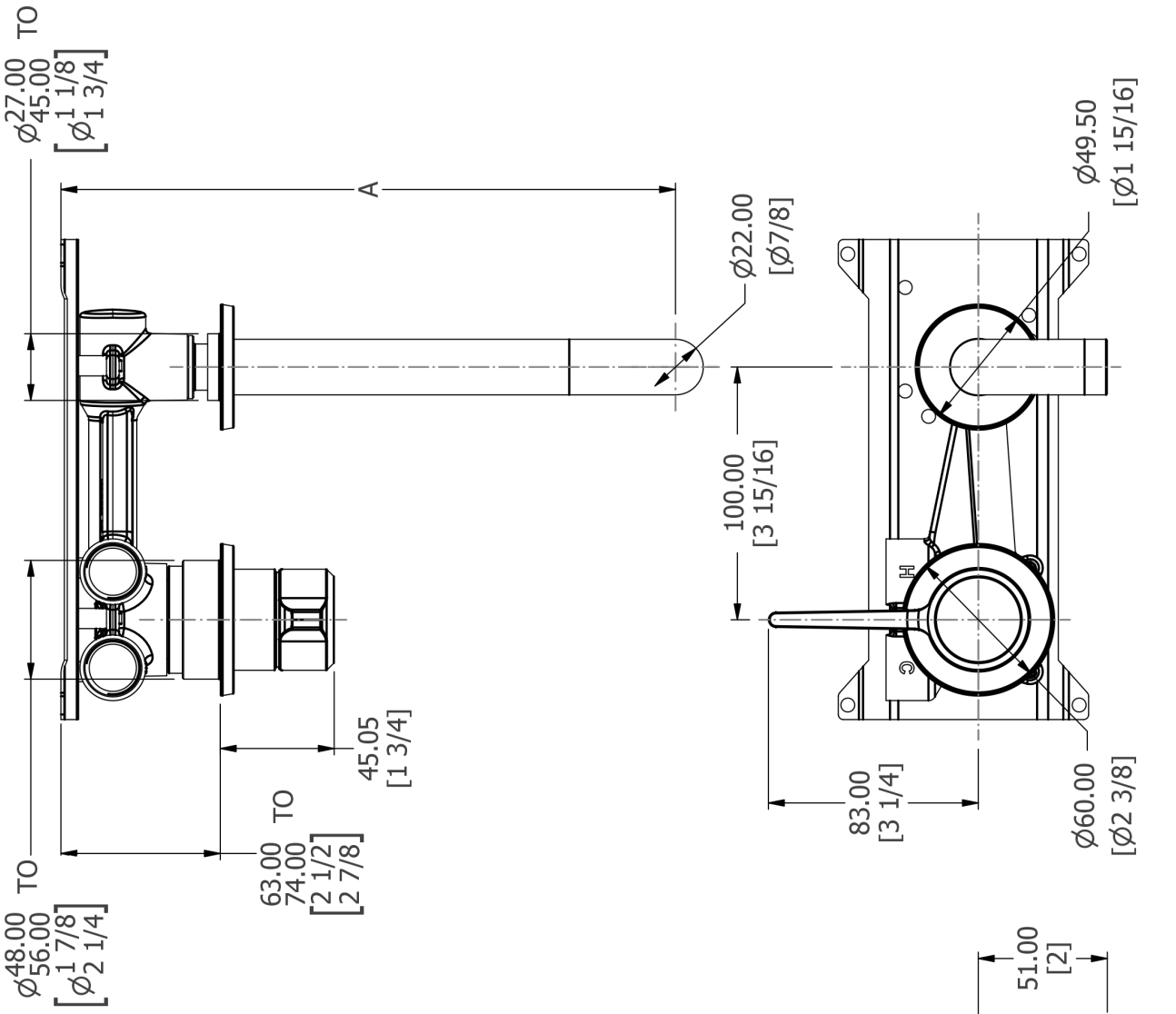

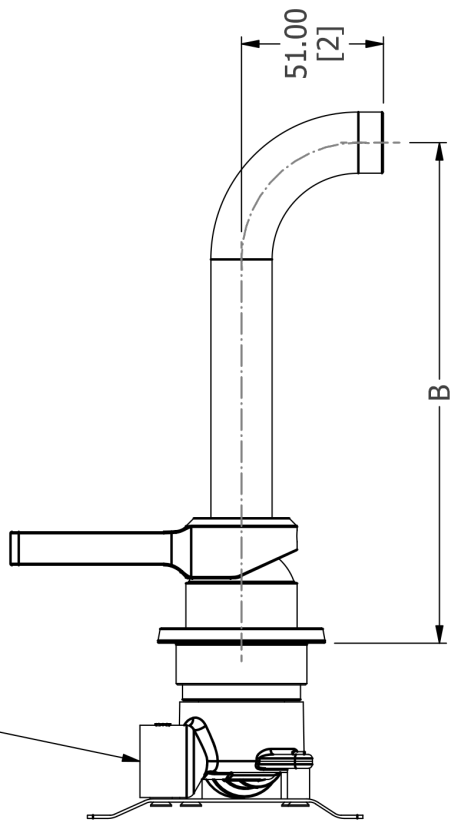

SEE INSTALLATION KIT DRAWING
UK & EU - T2020-IS-XX
US - T2020-AIS-XX

SPOUT LENGTHS -

T2020-120
A = 183mm [7 3/16] TO 194mm [7 5/8]
B = 120mm [4 3/4]

T2020-140
A = 203mm [8] TO 214mm [8 7/16]
B = 140mm [5 1/2]

T2020-1
A = 243mm [9 9/16] TO 254mm [10]
B = 180mm [7 1/16]

T2020-2
A = 263mm [10 3/8] TO 274mm [10 13/16]
B = 200mm [7 7/8]

Flow Rates

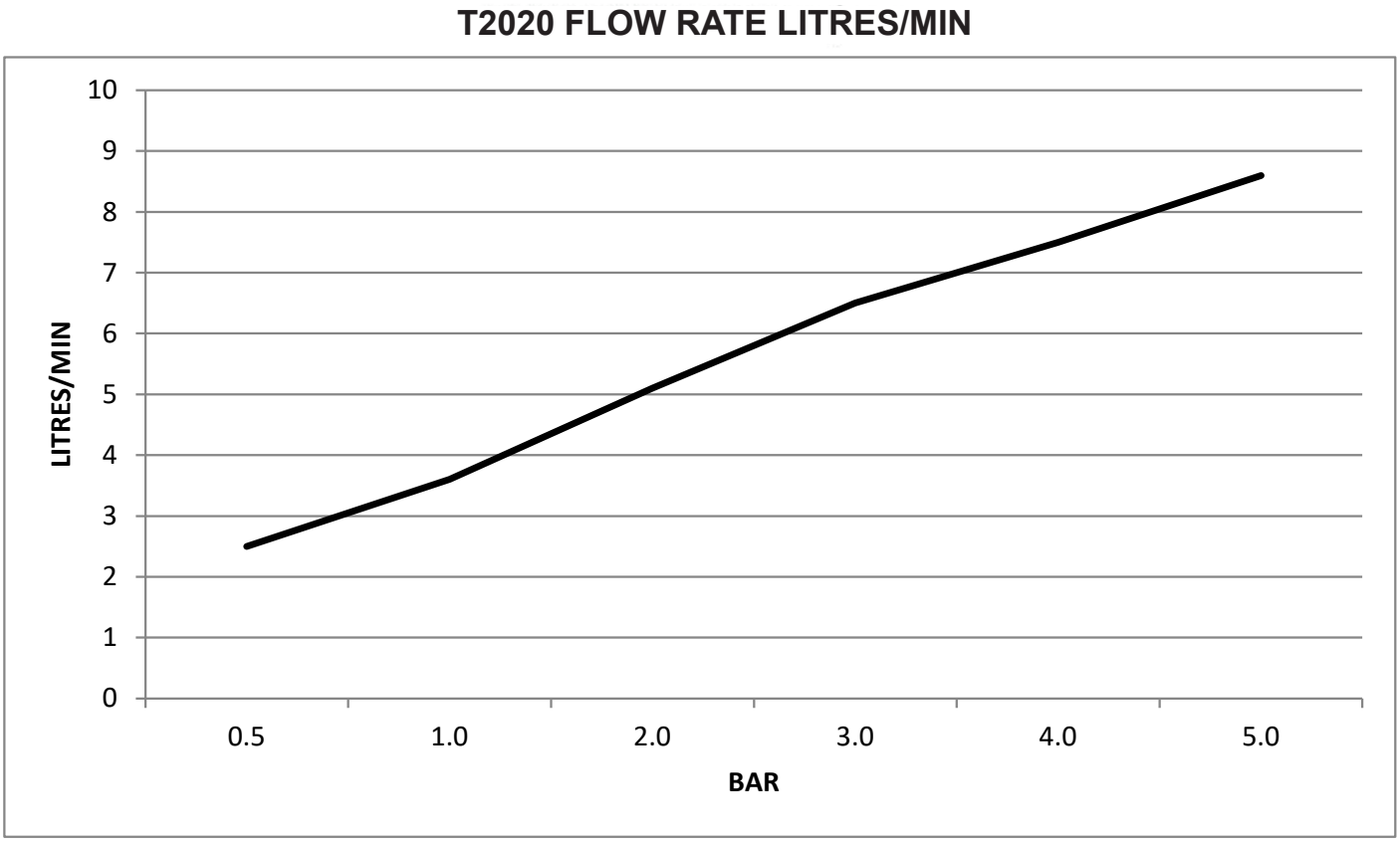

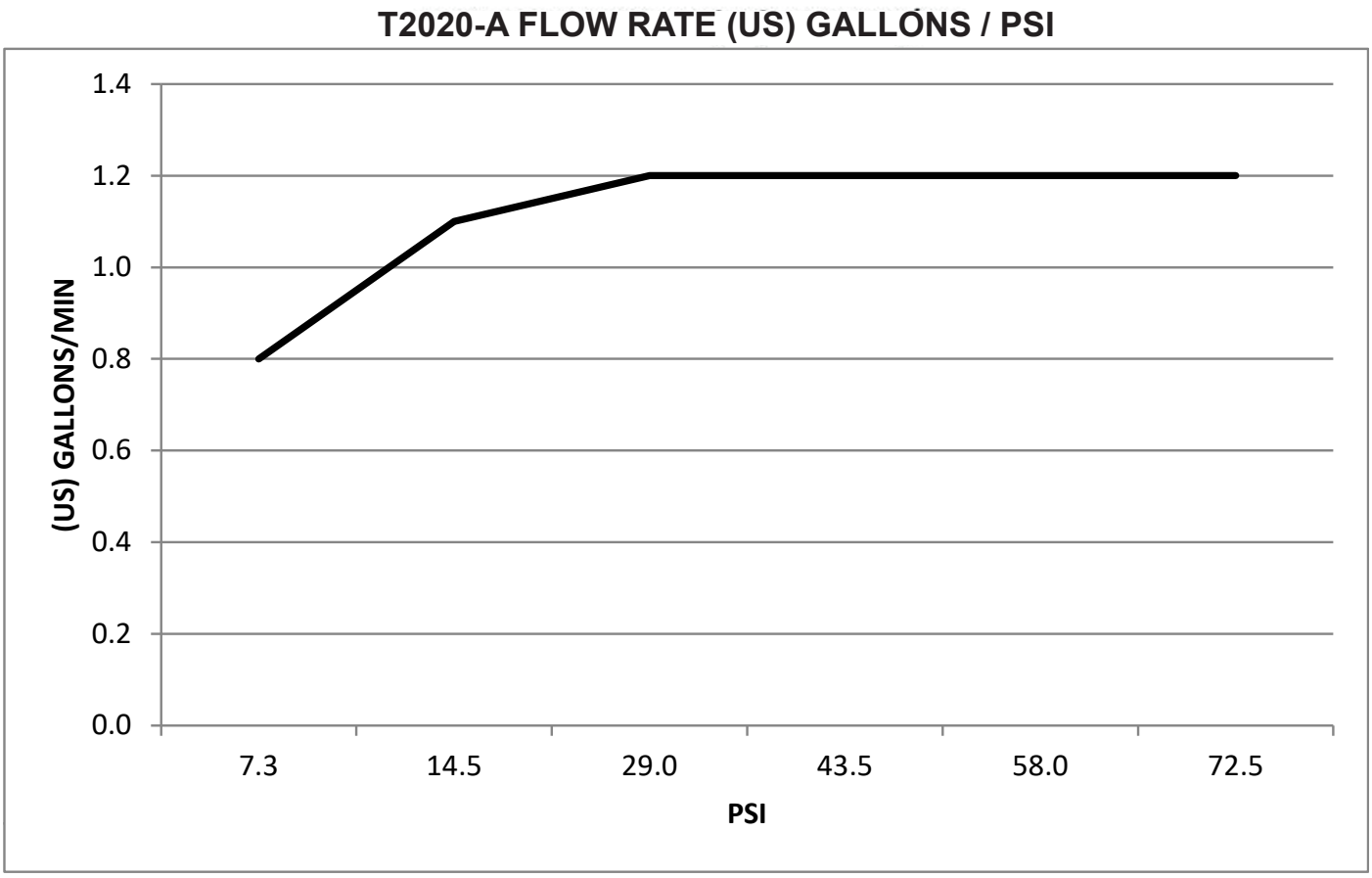

The flow rate data provided in this document is indicative of each product and is given in an open outlet condition. Installation design, external connections and fittings not supplied may affect the data provided.

Spares Information

T2020-CTL / T2020-A-CTL

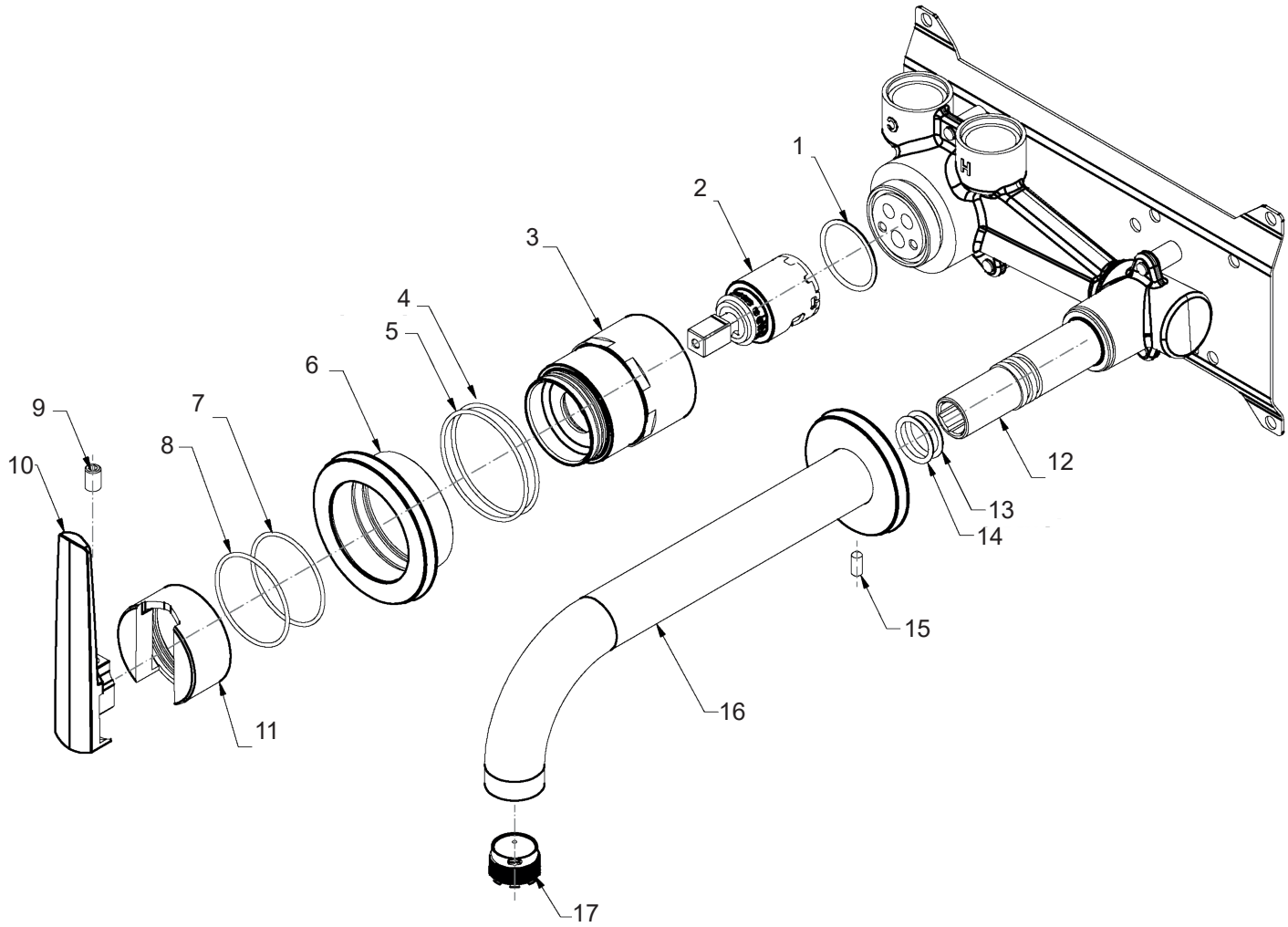

Item	Part No.	Description
1	-	O-Ring
2	-	Cartridge
3	-	Locking Collar
4	-	O-Ring
5	-	O-Ring
6	-	Escutcheon
7	-	O-Ring
8	-	O-Ring
9	-	Grub Screw
10	-	Lever
11	-	Rotating Collar
12	-	Aerator
13	-	Spout Assembly
14	-	Grub Screw
15	-	O-Ring
16	-	O-Ring
17	-	Spout Tail

Spares Information

T2020-CTR / T2020-A-CTR

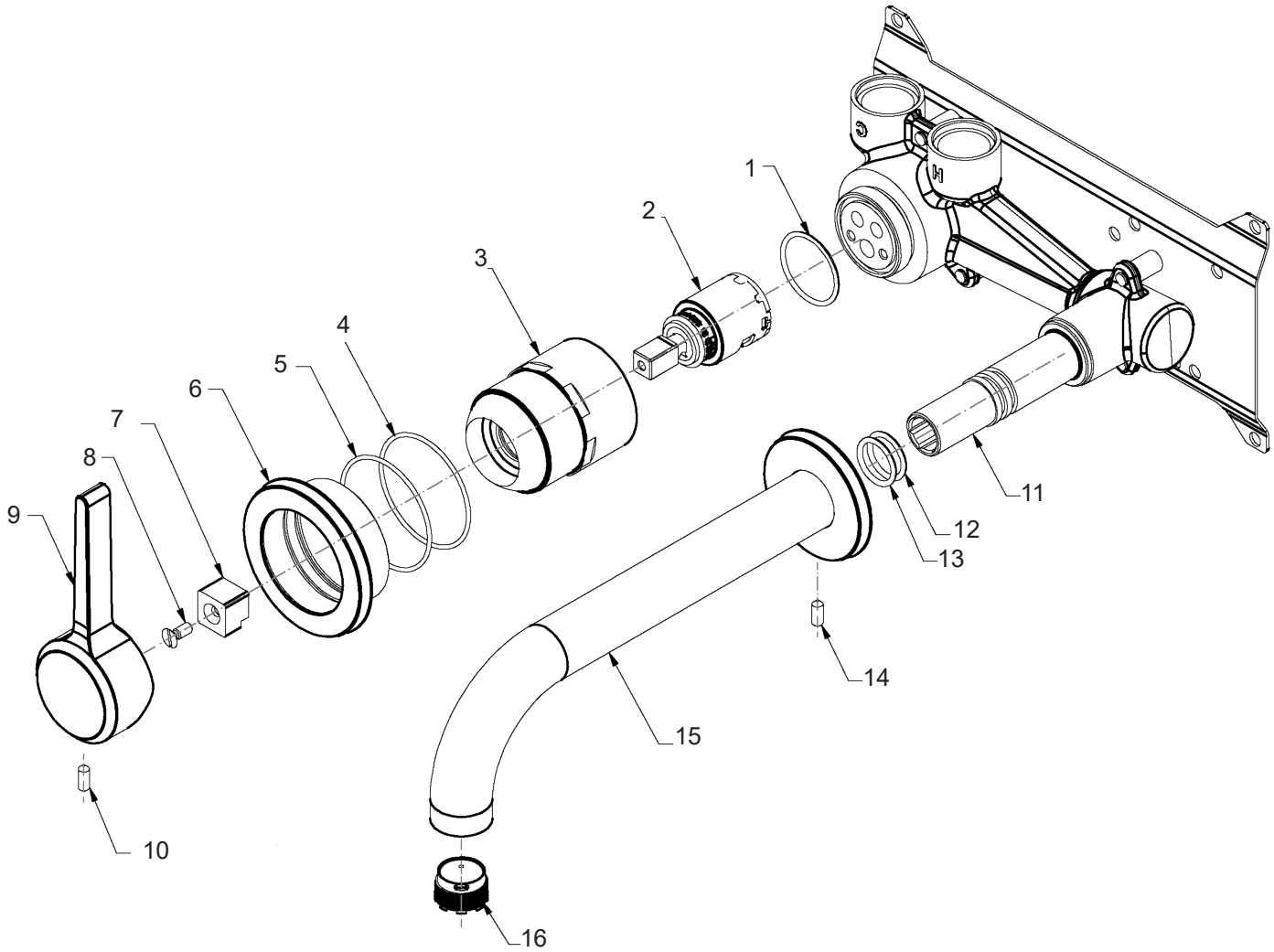

Item	Part No.	Description
1	-	O-Ring
2	-	Cartridge
3	-	Locking Collar
4	-	O-Ring
5	-	O-Ring
6	-	Escutcheon
7	-	Lever Adaptor
8	-	Screw
9	-	Lever
10	-	Grub Screw
11	-	Aerator
12	-	Spout Assembly
13	-	Grub Screw
14	-	O-Ring
15	-	O-Ring
16	-	Spout Tail

Installation

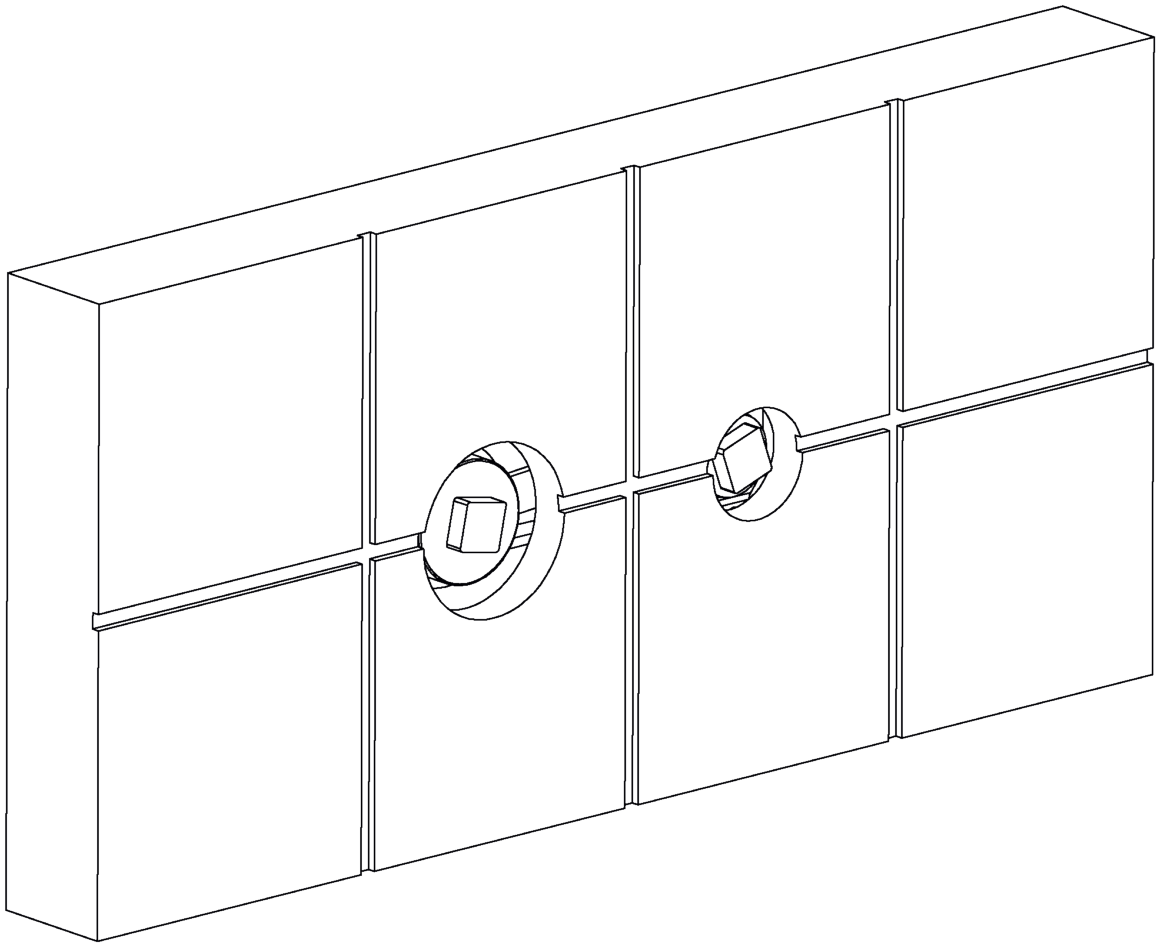

1. Install the finished surface, ensuring it is in accordance with the minimum and maximum installation depths and dimensions.

Installation

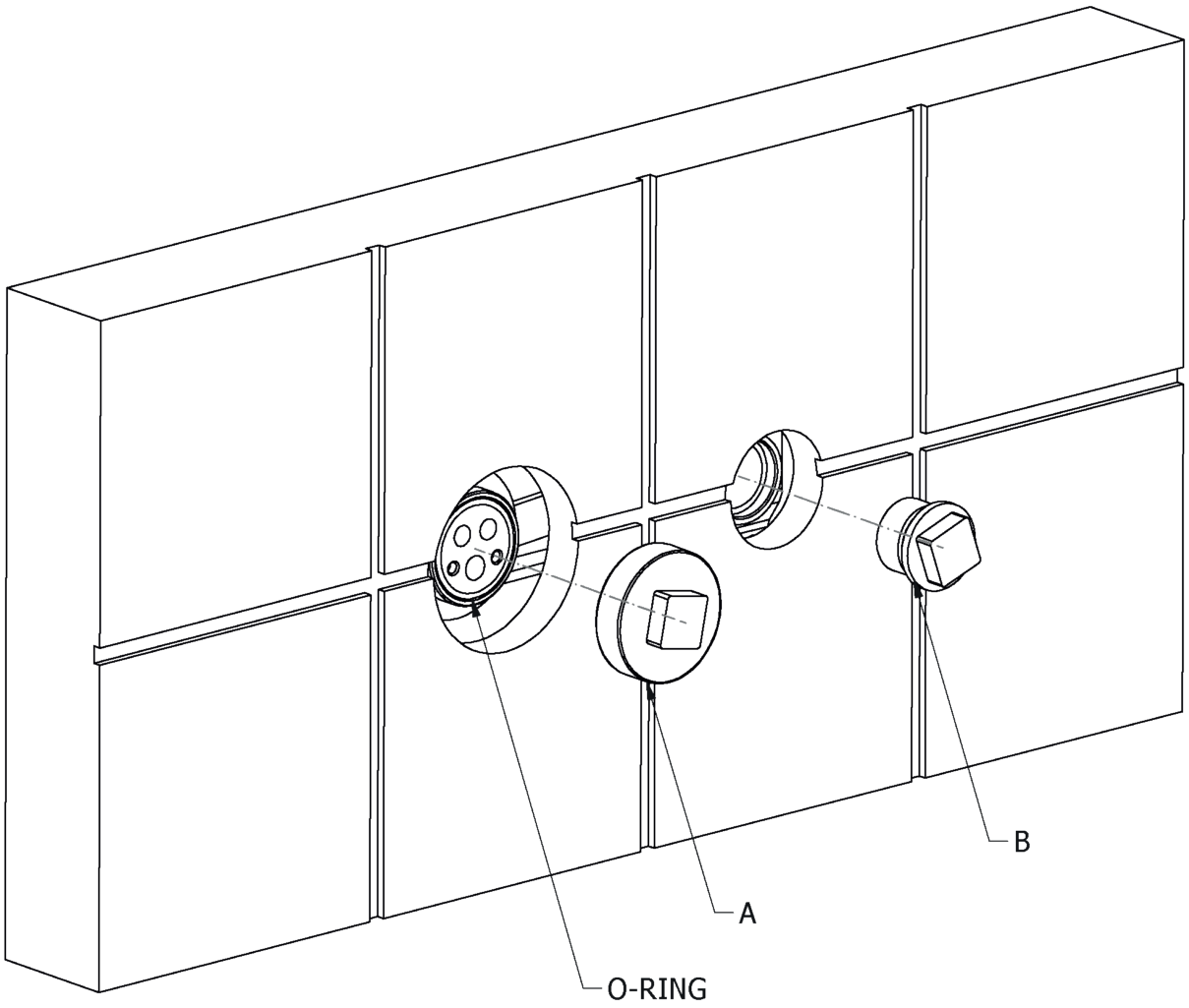

2. Ensure the supply to the installation system is isolated.

3. Remove blanking plugs (A) & (B).

NOTE - Ensure O-Ring remians in place.

Installation

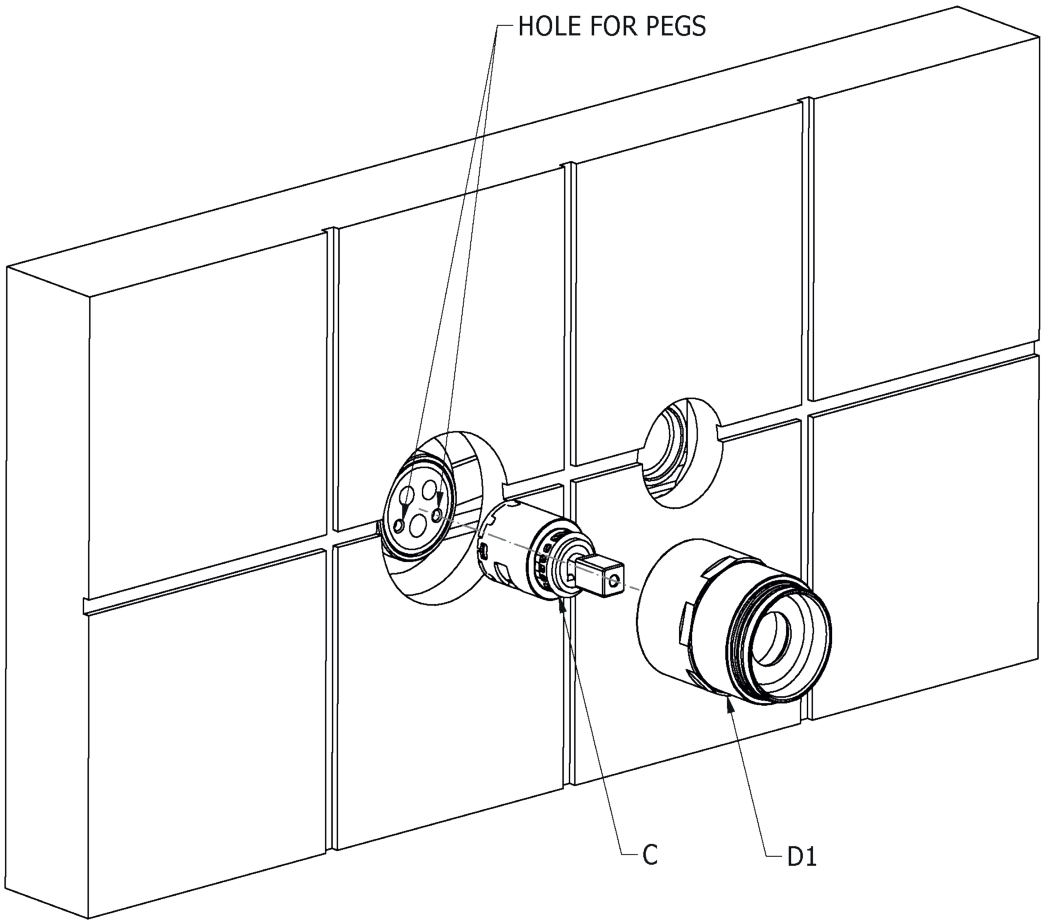

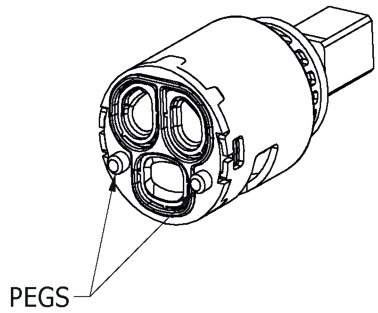

T2020-CTL

4. Insert cartridge (C) into installation kit, ensuring locator pegs on cartridge (C) align with peg holes on the installation kit.

5. Secure cartridge (C) into the installation kit using locking collar (D1).

NOTE - Locking collar (D1 & D2) must be tightened down to 10Nm, undone slightly, then re-tightened to 6.5Nm.

Installation

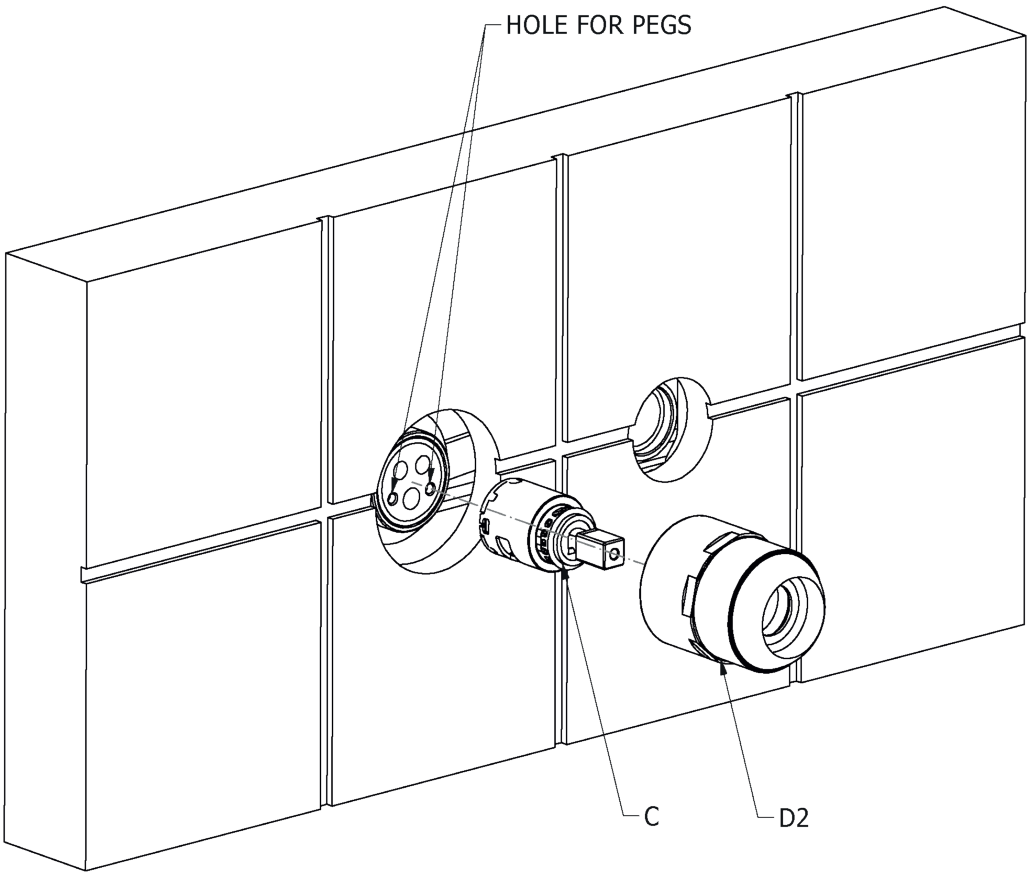

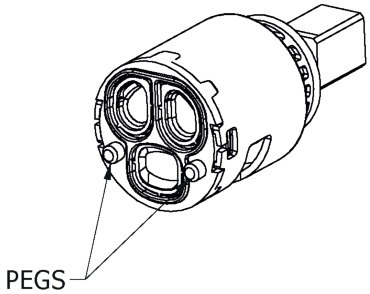

T2020-CTR

4. Insert cartridge (C) into installation kit, ensuring locator pegs on cartridge (C) align with peg holes on the installation kit.

5. Secure cartridge (C) into the installation kit using locking collar (D2).

NOTE - Locking collar (D1 & D2) must be tightened down to 10Nm, undone slightly, then re-tightened to 6.5Nm.

Installation

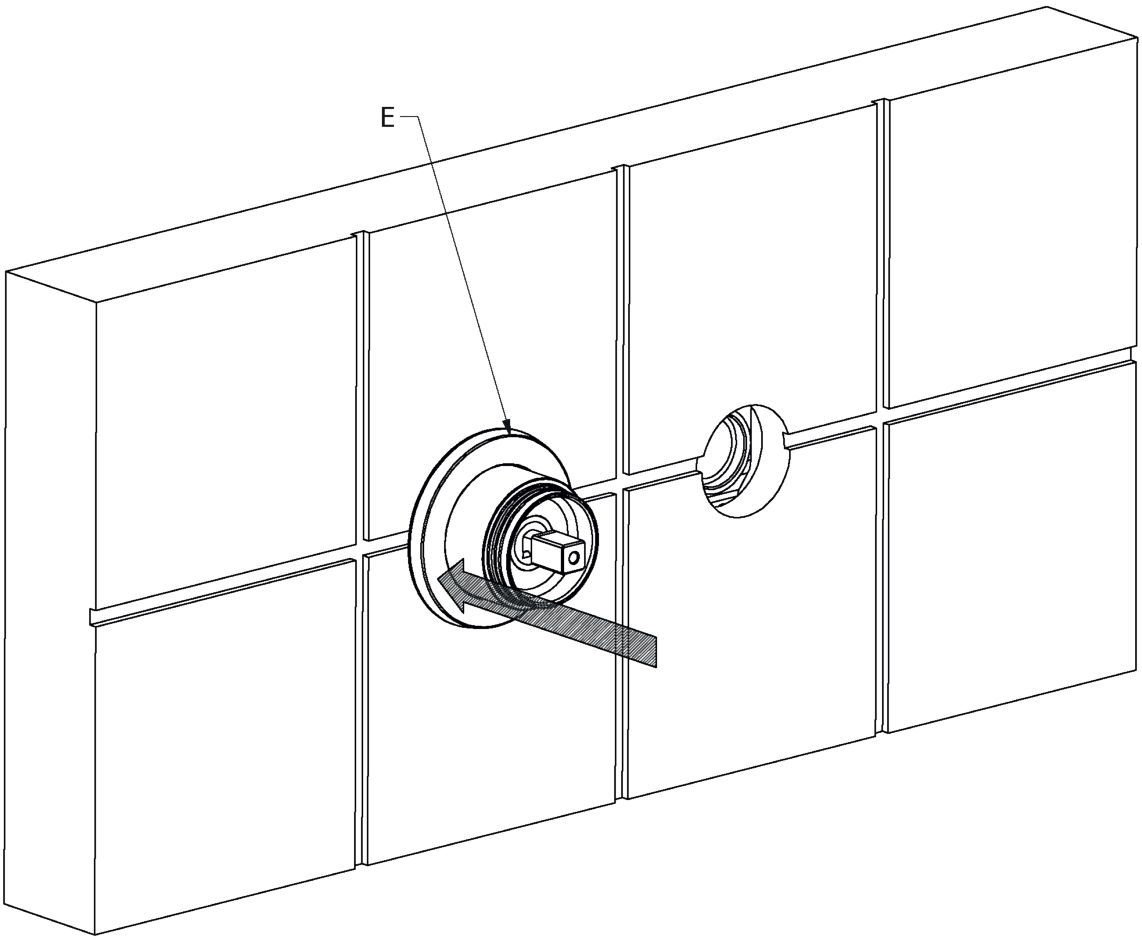

6. Apply silicone sealant to the finished surface before assembling trim rose (E).

7. Push trim rose (E) over locking collar (D1 & D2) and against the finished surface as shown.

8. Align trim rose (E) and secure in place.

Installation

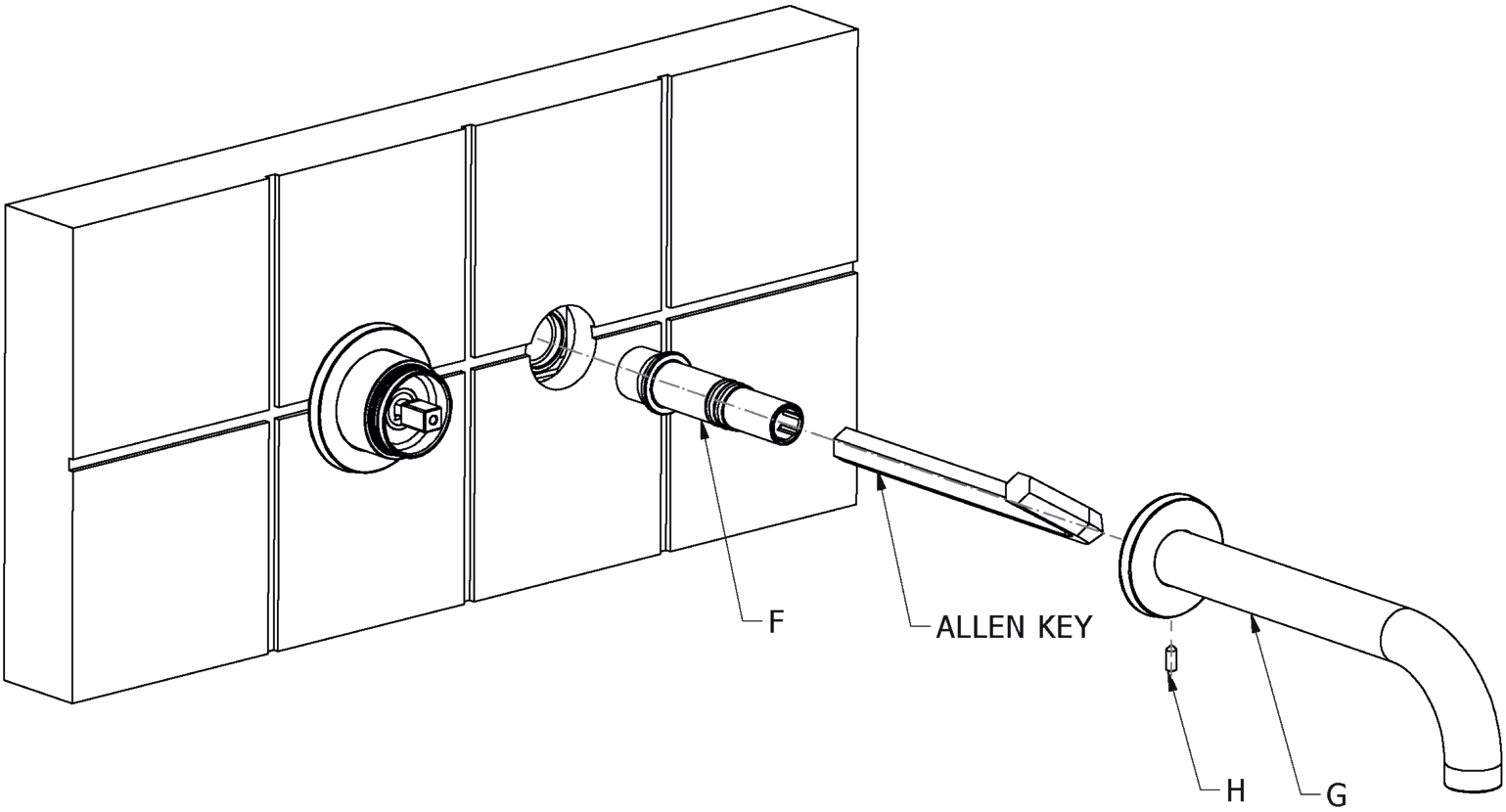

9. Screw spout tail (F) into installation kit behind the wall using a 12mm allen key (Not Provided).

10. Push spout assembly (G) onto spout tail (F) and apply silicon sealant to spout assembly rose (G). Align to desired angle and secure it to spout tail (F) using set screw (H).

Installation

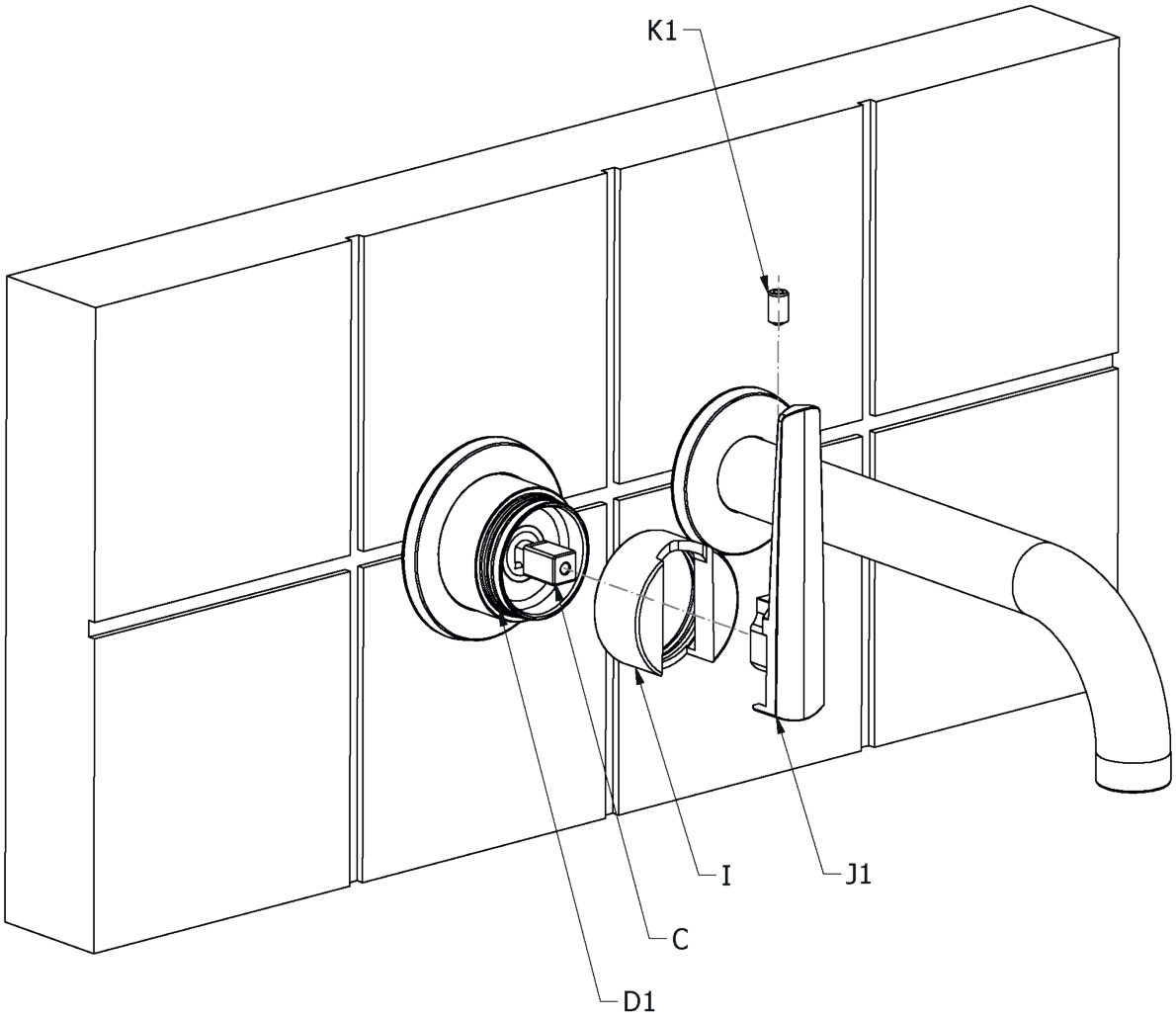

T2020-CTL

11. Push rotating collar (I) onto locking collar (D1), this will require force for it to snap into place.

12. Push CTL lever (J1) onto cartridge (C) and secure in place using grub screw (K1).

Installation

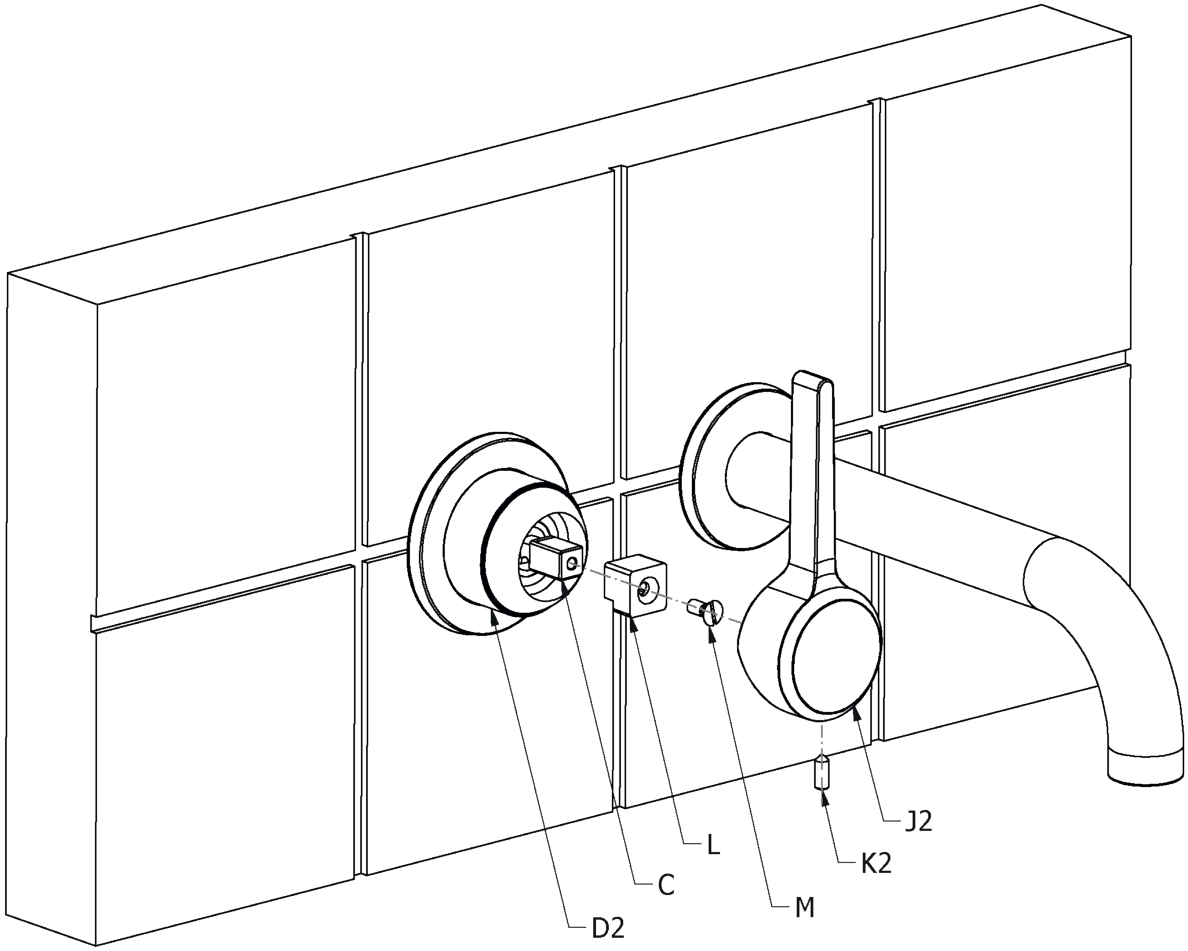

T2020-CTR

11. Push adaptor (L) onto cartridge (C) and secure in place using screw (M).

12. Push CTR lever (J2) onto square adaptor (L) and secure in place using grub screw (K2).

IMPORTANT NOTES

1. Installation should be carried out by a competent engineer in accordance with water regulations.
2. Before installation ensure supply pipes are flushed clean as debris or loose particles will affect the effiency of the ceramic disc cartridge.
3. For mixer taps it is recommended that hot & cold pressures are equally balanced.
4. To help maintain the high quality finish please clean with a soft damp cloth. Do not use abrasive polish or cleaners. Stains may be removed using diluted washing up liquid.
5. Ceramic cartridges in hard water areas. To prolong the lifespan and reduce servicing periods of your Samuel Heath tap we recommend that a suitable water softener be fitted. Consult your installer/designer for details.
6. Please note that as with all tap and shower ware it will be necessary from time to time for the products to be serviced, this should be carried out by a qualified Plumbing Engineer.

NOTES IMPORTANTES

1. L'installation doit être faite par un ingénieur qualifié, selon les réglements du Service Eau.
2. Avant l'installation, il faut s'assurer que les tuyaux d'approvisionnement sont complètement purgés. Les déchets flottants auront un effet détrimentaire sur l'efficacité de la cartouche céramique.
3. Il est recommandé que les pressions de l'eau chaude et eau froide des mitigeurs et mélangeurs soient maintenues à un niveau égal.
4. Pour conserver la finition de haute qualité, nettoyer avec un chiffon doux et humide. N'employer jamais de la cire et des produits abrasifs. Les tâches peuvent être enlevées à l'aide de liquide vaisselle pur.
5. Cartouches en céramique dans les régions à eau calcaire. Pour prolonger la durée et réduire l'entretien de votre robinetterie Samuel Heath, nous recommandons d'utiliser un adoucisseur d'eau convenable. Veuillez consulter votre installateur/fournisseur pour plus de renseignements.
6. Veuillez noter qu'un entretien sera nécessaire de temps en temps et doit être effectué par un installateur qualifié.

WICHTIGE HINWEISE

1. Installation sollte durch einen kompetenten Fachmann und nach den üblichen Vorschriften ausgeführt werden.
2. Vor Installation Wasserleitung gründlich durchspülen. Verschmutzung wird die Funktion der Kartusche erheblich einschränken.
3. Für Mischbatterien ist es wichtig, daß Wasser mit gleichem Druck eingefuhrt wird.
4. Um den optimalen Zustand dieses Produktes zu erhalten, wischen Sie es bitte nur mit einem feuchten, weichen Lappen ab. Auf keinen Fall Scheuermittel verwenden. Flecken lassen sich mit unverdünntem Geschirrspülmittel entfernen.
5. Keramikkartuschen in Hartwasserbereichen. Um die Lebensdauer zu verlängern und Wartungszeiten zu reduzieren empfiehlt Samuel Heath den Einsatz eines geeigneten Wasserenthärters. Fragen Sie Ihren Installateur/Designer um Rat.
6. Bitte merken Sie, dass alle Armaturen ab und zu eine Wartung brauchen. Diese soll durch einen kompetenten Installateur ausgeführt werden.

ATENCION

1. La instalación se debe realizar por un fontanero.
2. Antes de la instalación, deben pulgar las tuberias dejándo correr el agua por las tuberias para que arrastren los residuos de montaje/obra, con el motivo de que no afecte la eficacia del cartucho de ceramica.
3. Para grupo baño/ducha se recomienda que las presiones del agua caliente y frio sean equilibradas.
4. Para ayudar a mantener el acabado de este producto, limpiar con un paño húmedo suave. No se debe emplear productos abrasivos de baño. Las manchas se pueden quitar empleándo liquido lava-vajillas puro.
5. Cartuchos cerámicos en áreas de aguas duras . Para prolongar su vida útil y reducir los periodos de reparación de su grifo SamuelHeath recomendamos la instalación de un descalcificador de agua. Consulte a su instalador para más detalles.
6. Igual que con todo tipo de griferia y duchas, de vez en cuando será necesario llevar a cabo una revisión al producto; esto deberia ser realizado por un fontanero calificado.

ATTENZIONE

1. L'impianto deve essere montato da personale tecnico in conformità alle vigenti leggi.
2. Prima dell'installazione assicurarsi che le tubature dell' aqua siano pulite. Detriti o residui di lavorazione compromettono l'efficenza del cartuccio.
3. Per i gruppi, si raccomanda che le pressioni acqua calda e acqua fredda siano ugualmente bilanciate.
4. Per mantenere la finizione di ottima qualità, pulire con un panno soffice e inumidito. Non usare creme lucidanti e materiali abrasivi. Le macchie potranno essere tolte usando del detersivo per piatti puro.
5. Come con tutti i tipi di rubinetti e docce, di volta in volta è necessario effettuare una revisione al prodotto; questo dovrebbe essere fatto da un idraulico qualificato.

SAMUEL HEATH

Head Office and Customer Service
Leopold Street
Birmingham
England
B12 0UJ

T: +44 (0)121 766 4200

Info@samuel-heath.com
www.samuel-heath.co.uk

US Customer Service
usa@samuel-heath.com
www.samuel-heath.com

8-40684
Issue: B