SAMUEL HEATH

Product Data Sheet

V7K33/ V7KA33

Single Lever Mixer with Hand Spray

- Available Control Options -		
V7K33LF/ V7KA33LF	**V7K33LK/ V7KA33LK**	**V7K33LL/ V7KA33LL**

Dimension Key

V7K33LF

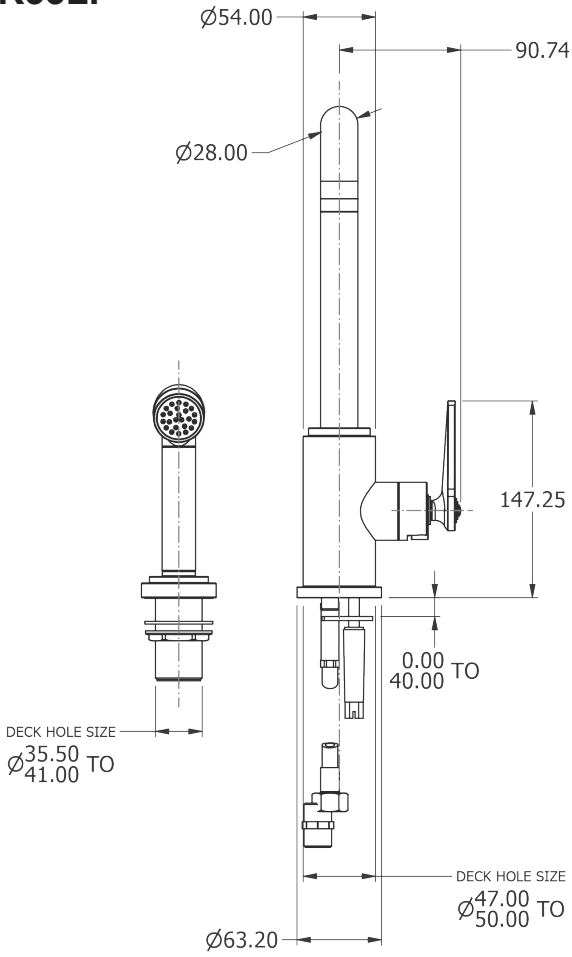

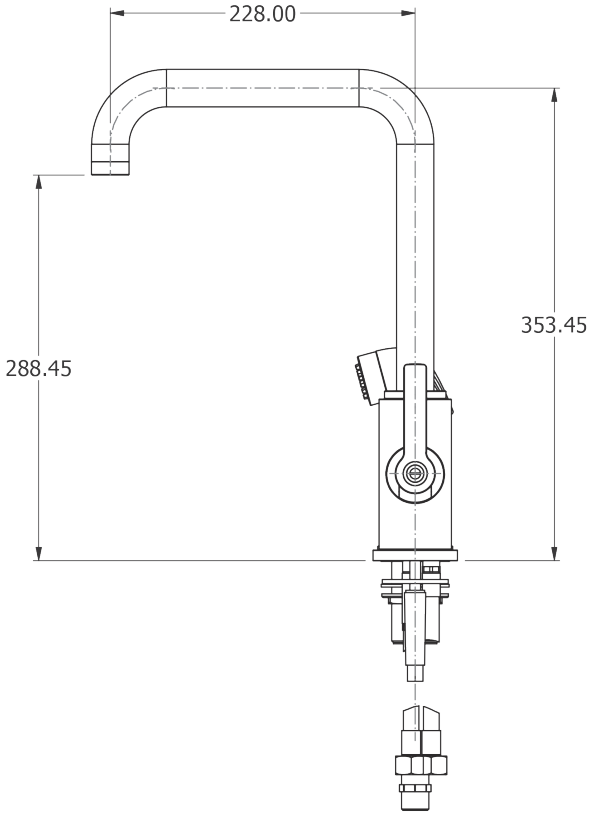

V7K33LK

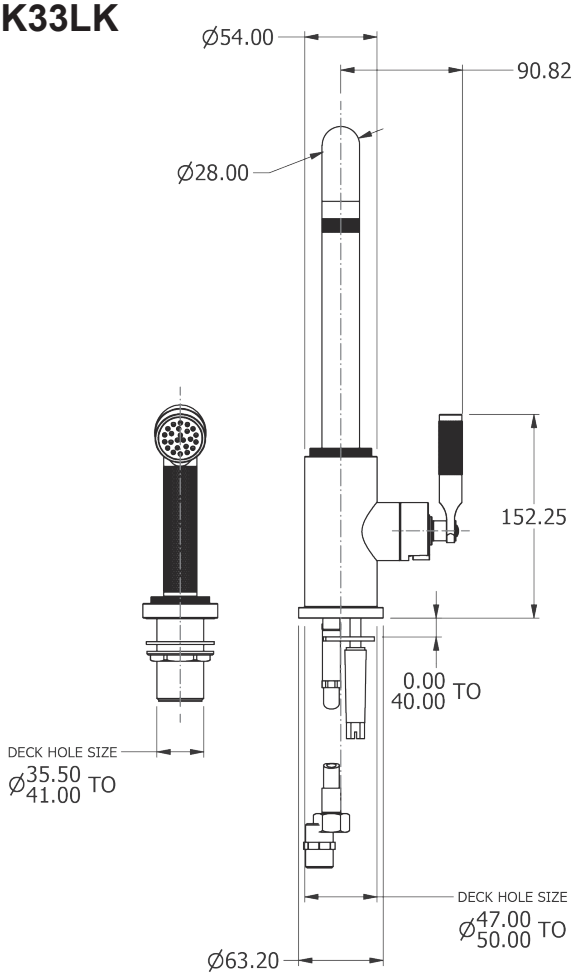

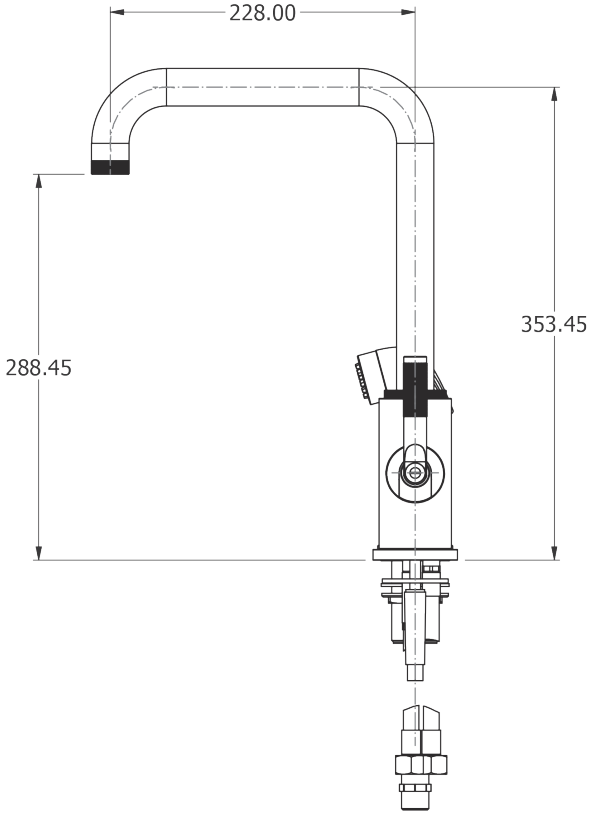

Dimension Key
V7K33LL

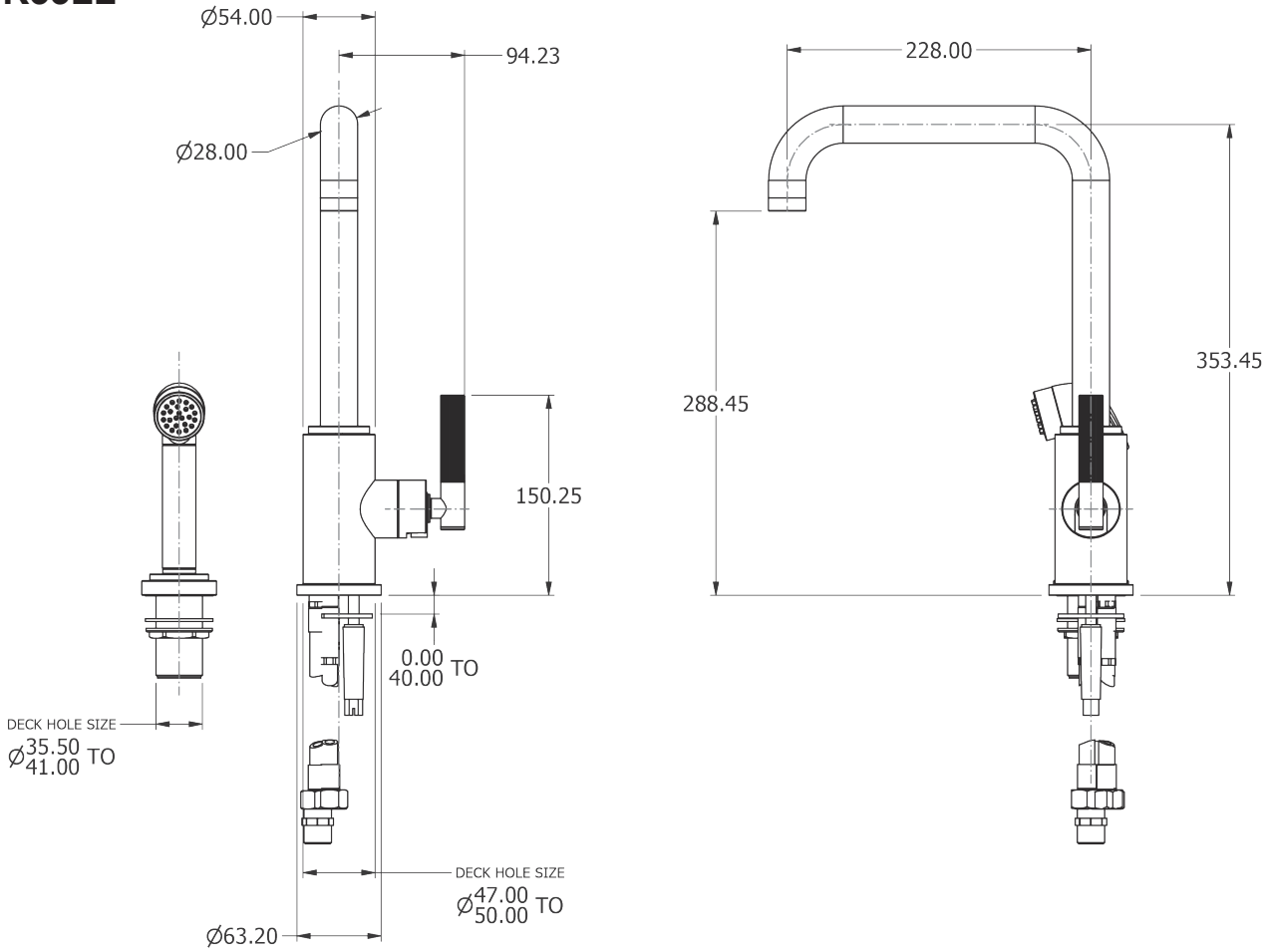

Dimension Key

V7KA33LF

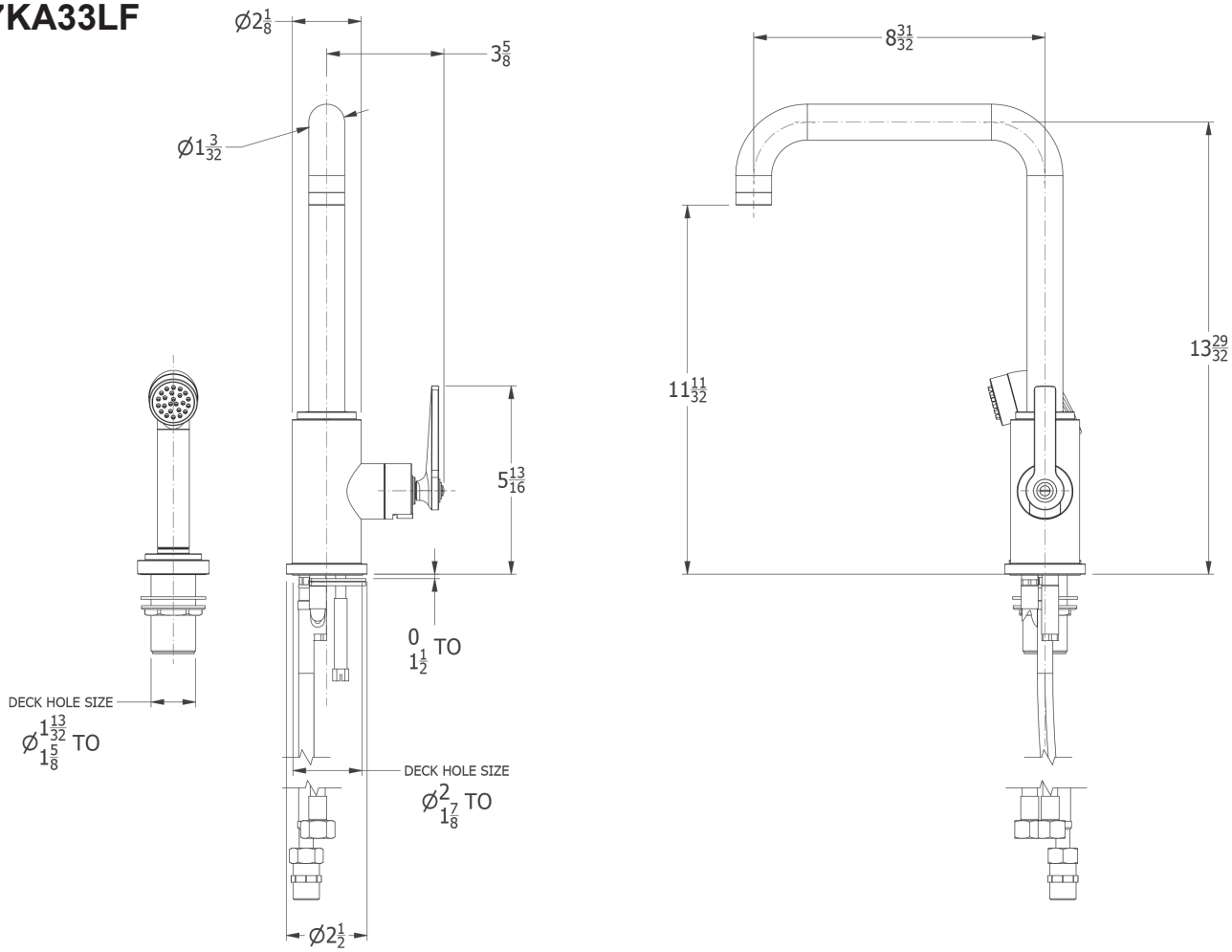

V7KA33LK

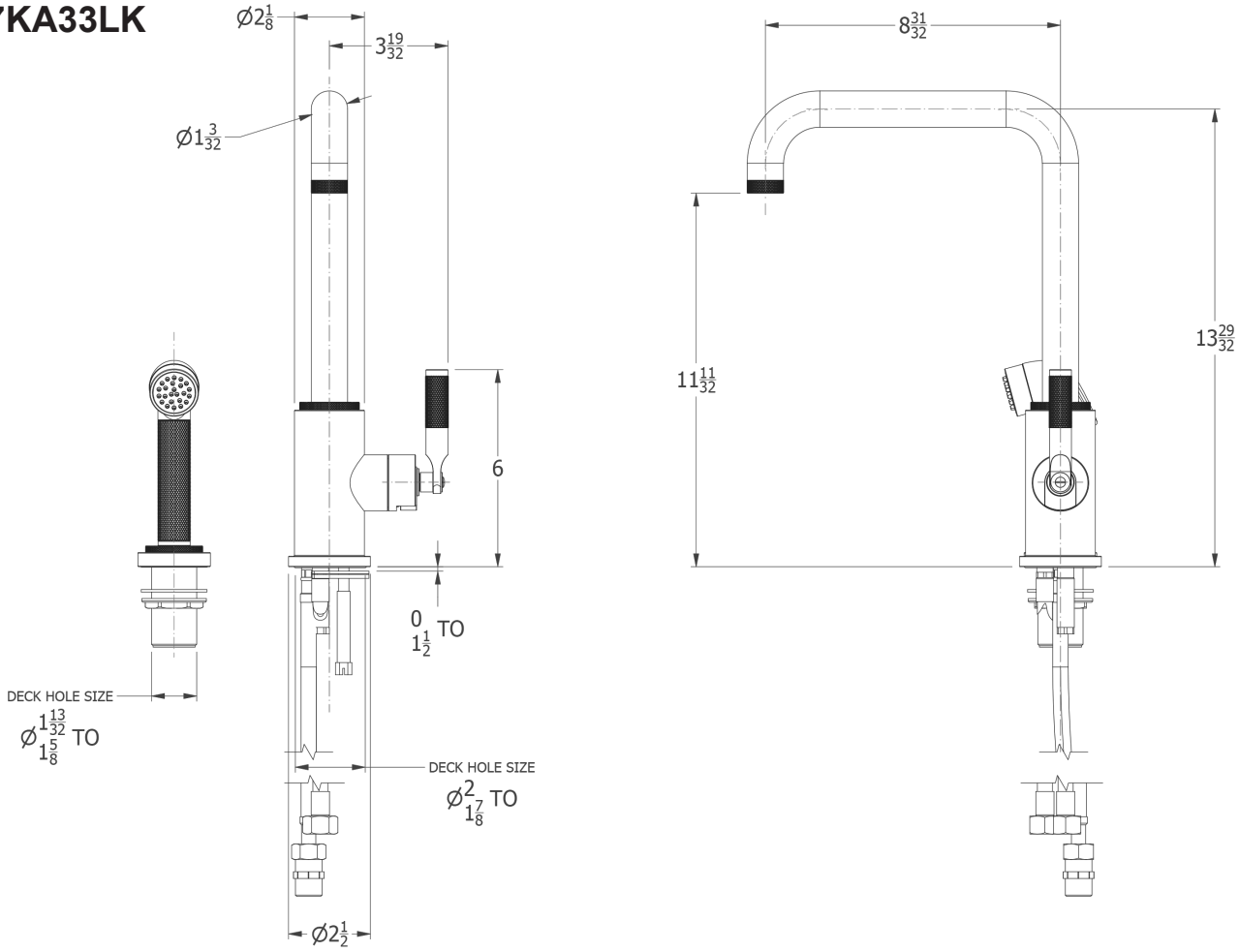

Dimension Key
V7KA33LL

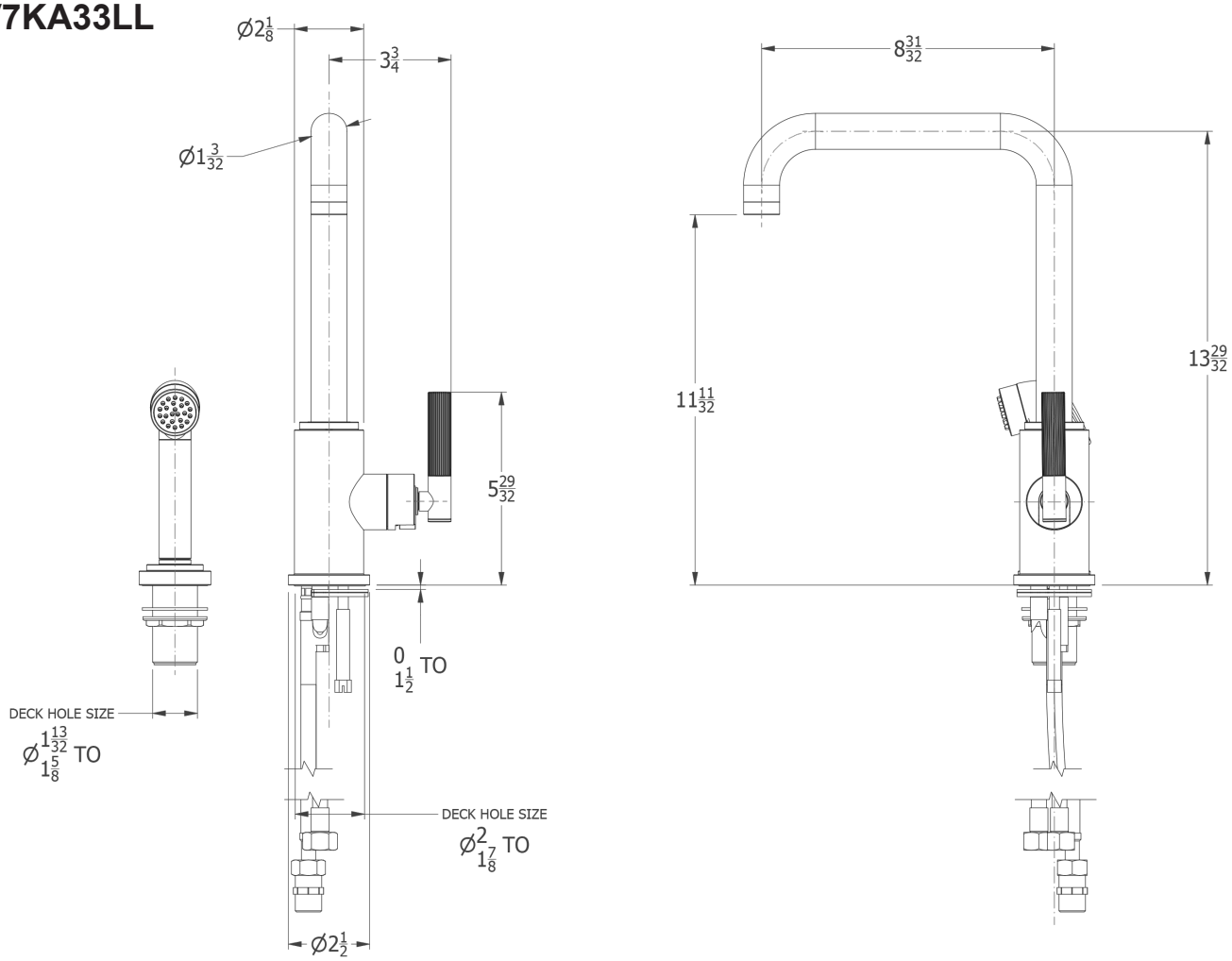

Dimension Key
Lever movement

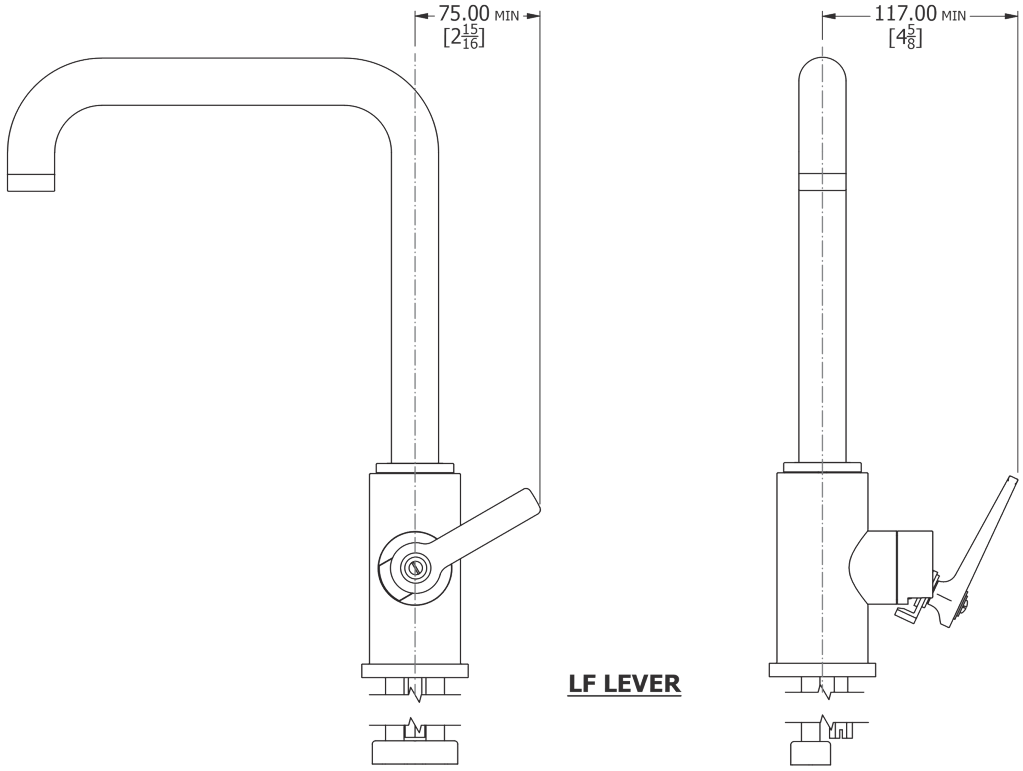

LF LEVER

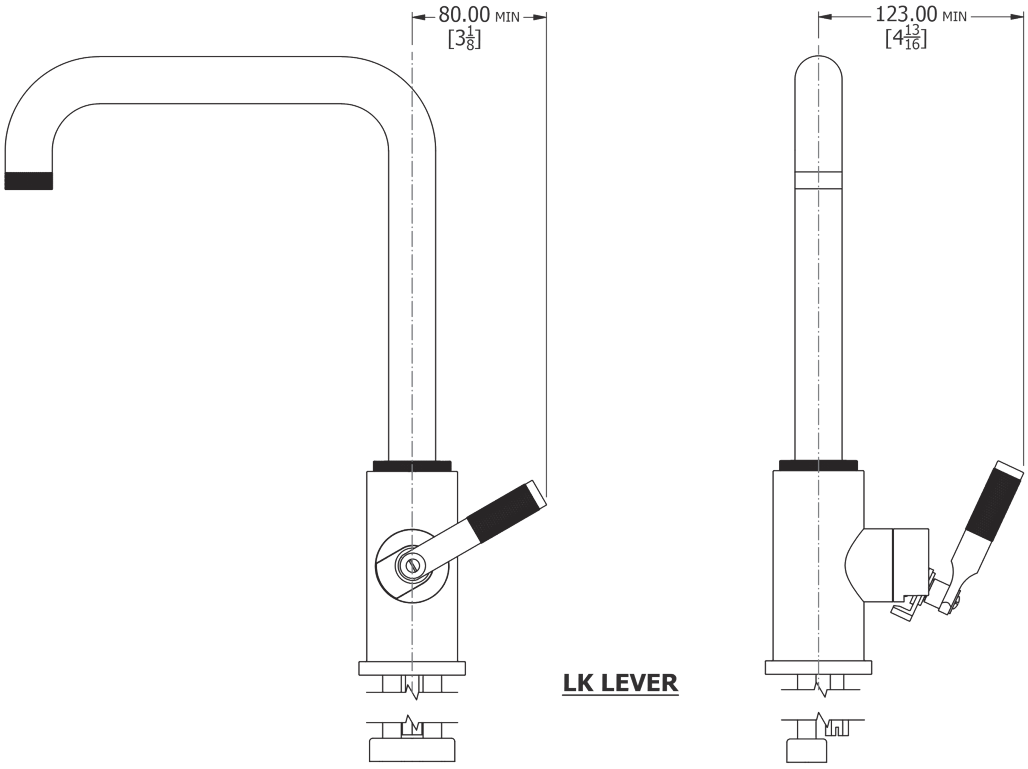

LK LEVER

Dimension Key
Lever movement

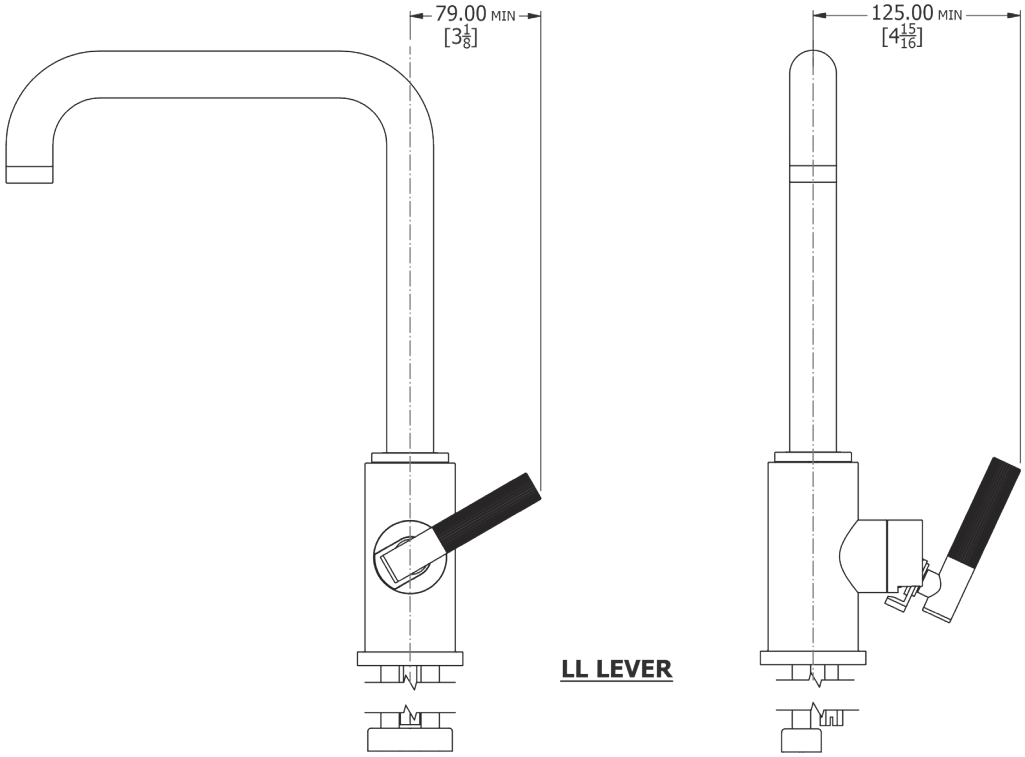

Flow Rates

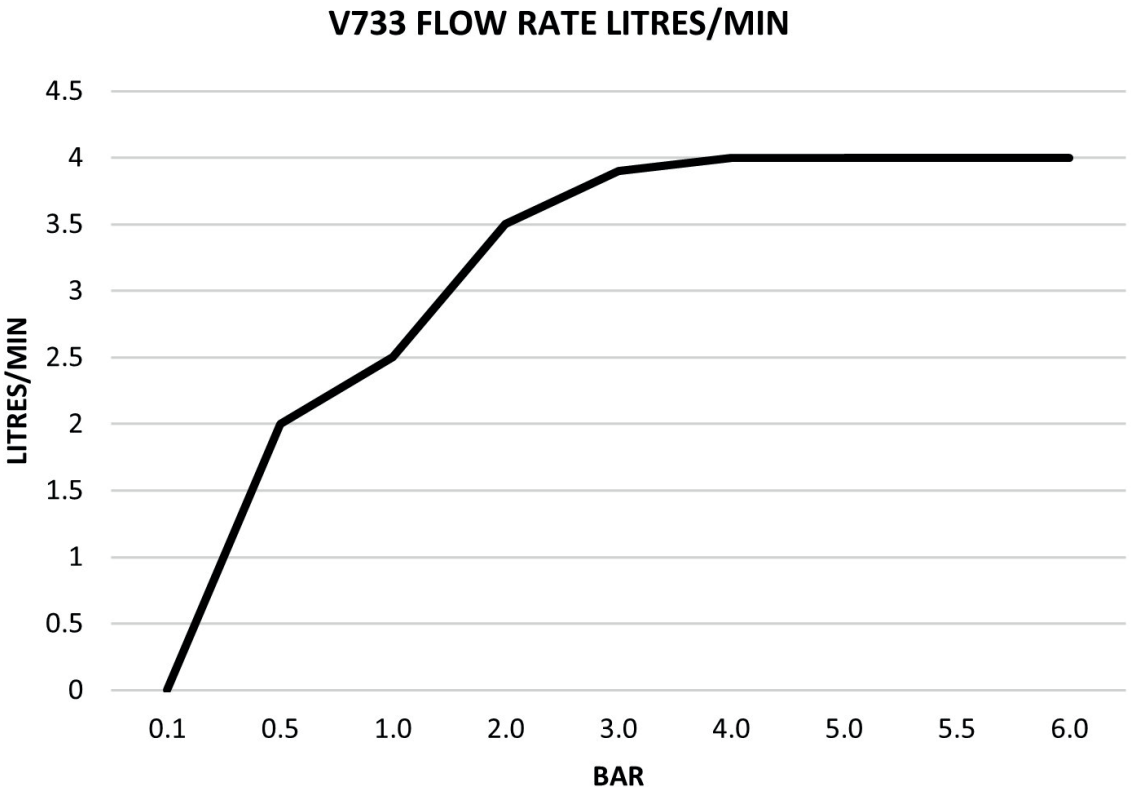

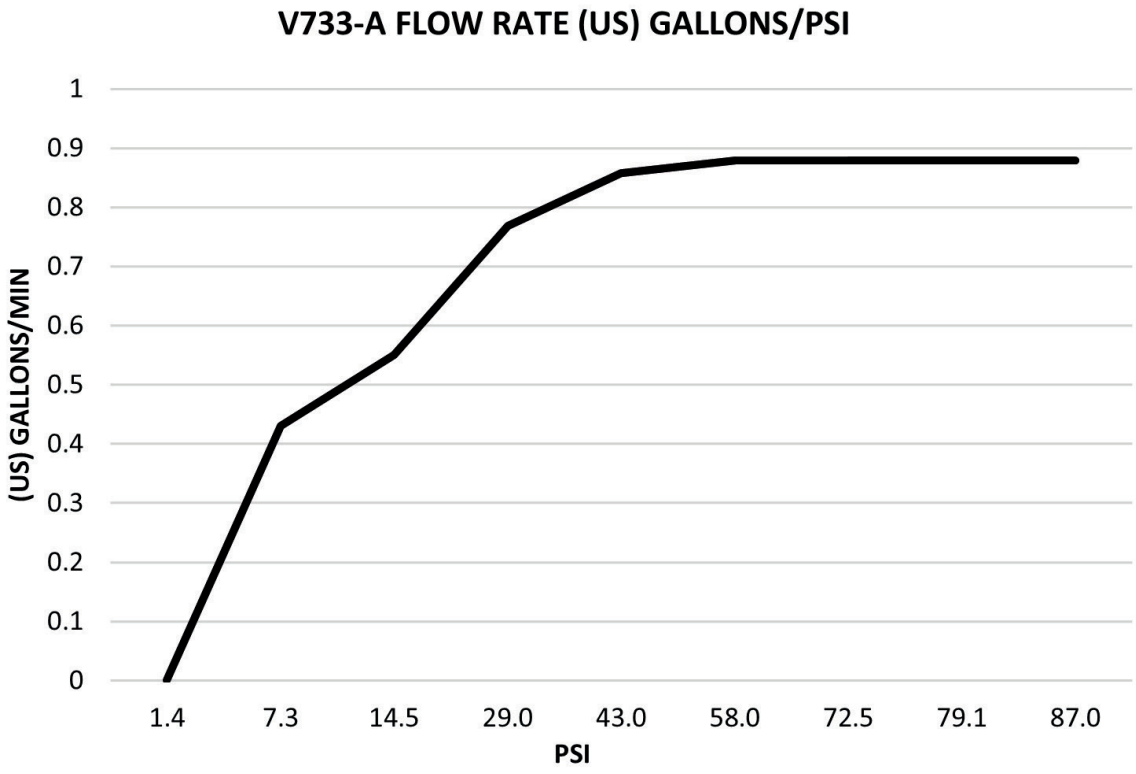

The flow rate data provided in the document is indicative of each product and is given in an open outlet condition. Installation design, external connections and fittings not supplied may affect the data provided.

Flow Rates

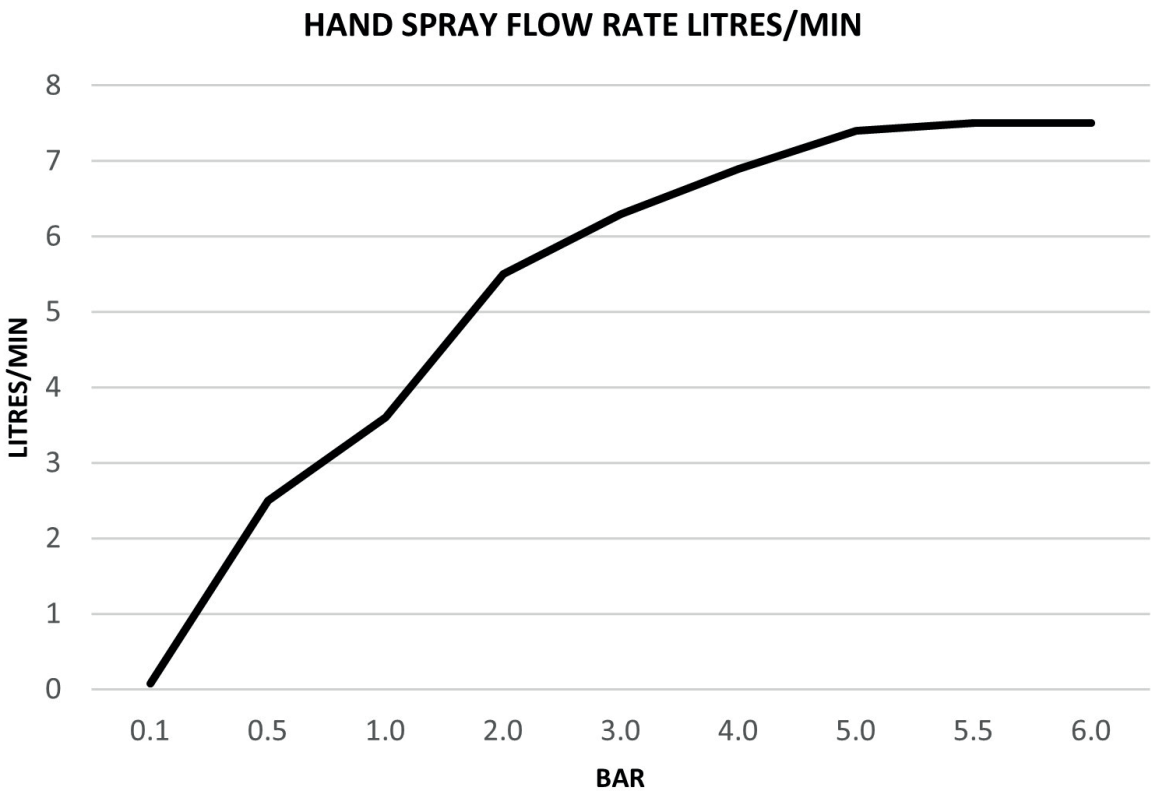

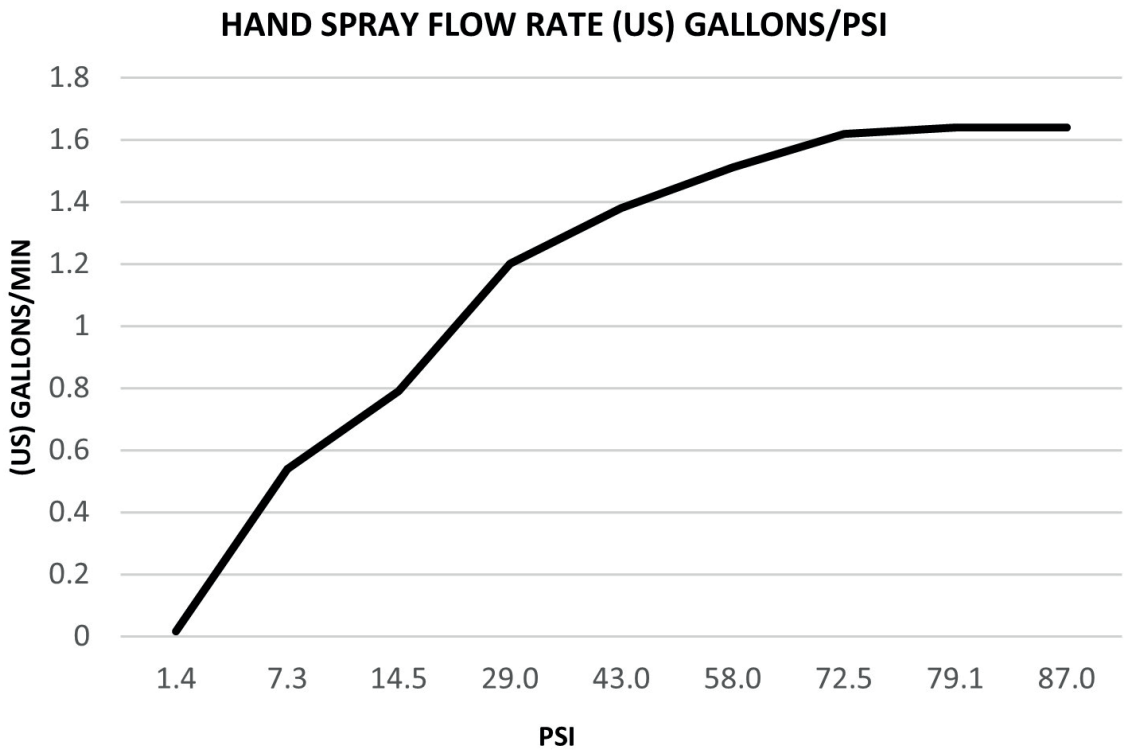

The flow rate data provided in the document is indicative of each product and is given in an open outlet condition. Installation design, external connections and fittings not supplied may affect the data provided.

Spare Information
V733 / V733-A

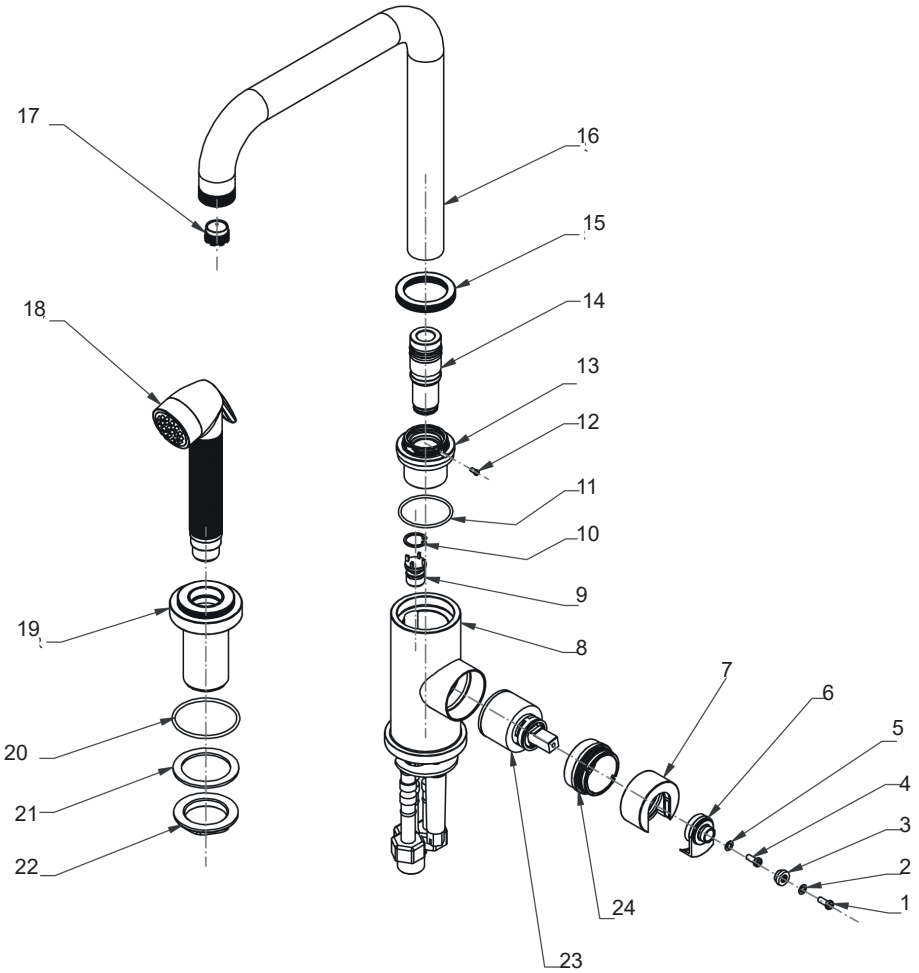

Item	Part No.	Description	Item	Part No.	Description
1	-	Screw	15	-	Spout Ring
2	-	Washer	16	-	Spout
3	-	Adaptor	17	-	Aerator
4	-	Screw	18	-	Hand Spray
5	-	Washer	19	-	Hand Spray Holder
6	-	Lever Head	20	-	O-Ring
7	-	Rotating Collar	21	-	Washer
8	-	Tap Body	22	-	Back Nut
9	-	Diverter Valve	23	VS56022	Cartridge
10	-	Circlip	24	-	Collar Lock Nut
11	-	O-Ring			
12	-	Screw			
13	-	Manifold			
14	-	Spout Tail			

Control Assembly Instructions - LF, LK

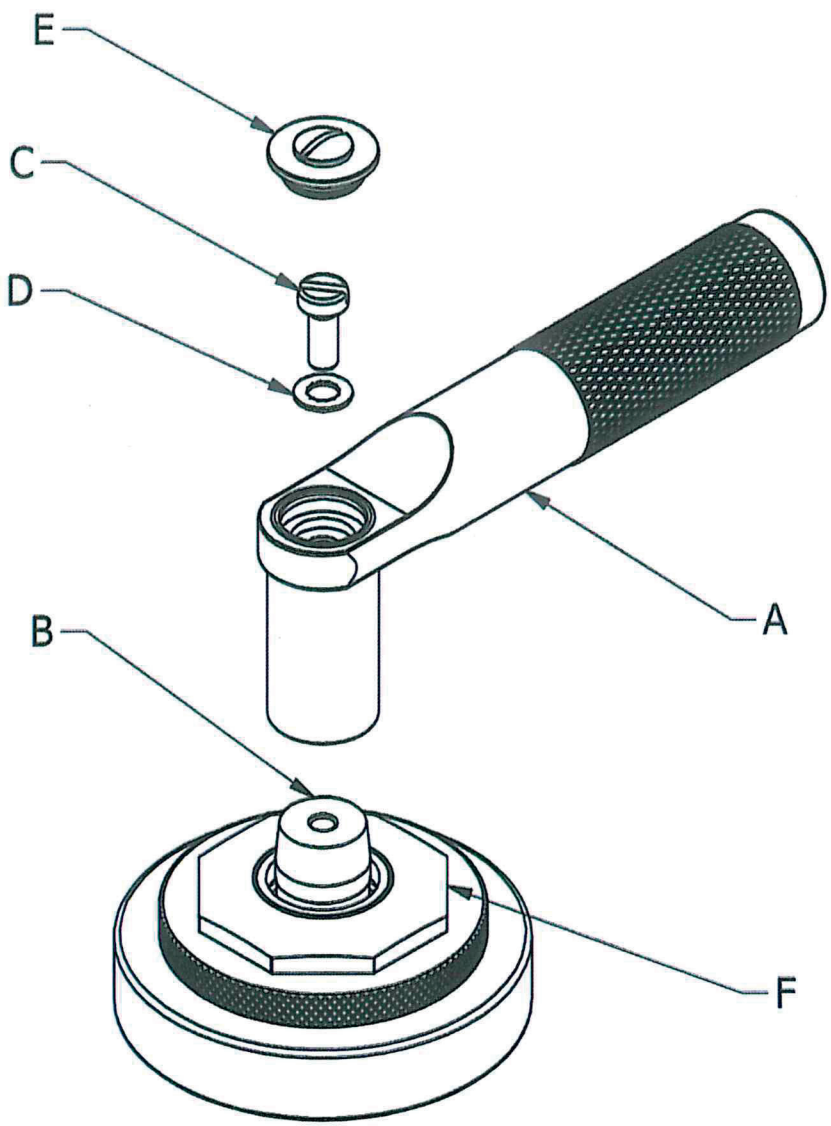

1. Screw handle (A) onto spindle (B) using screw (C) and washer (D).

2. Push indice (E) into the handle option (A) to conceal the fixing.

3. The octagonal nut (F) can be rotated to the desired angle.

Note: The taper on the spindle (B) will lock in to the female taper in the handle option (A).

To remove the handle option (A) remove the screw (C) and washer (D). The handle option (A) has an M5 thread through its central fixing hole, by screwing an M5 screw in to this it will push the handle option (A) and the spindle (B) apart.

Control Assembly Instructions - LL

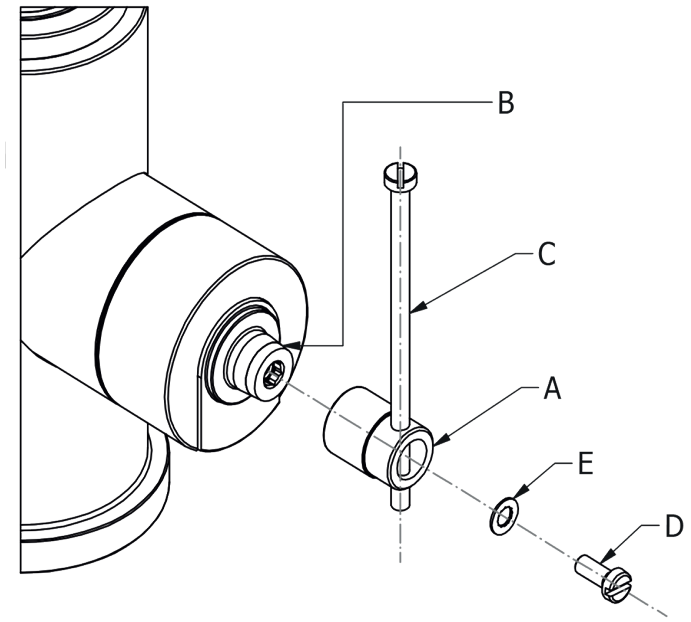

STEP 1:

1. Place adapter (A) onto the tapered spindle (B).

2. Align the adapter (A) using assembly guide screw (C) to mimic the desired position of the lathe lever.

3. Carefully remove guide screw (C) and secure adapter using screw (D) and washer (E).

STEP 2:

4. Attach lathe lever (F) to adapter (A) using screw (H) and washer (G).

5. Conceal screw using indice (I).

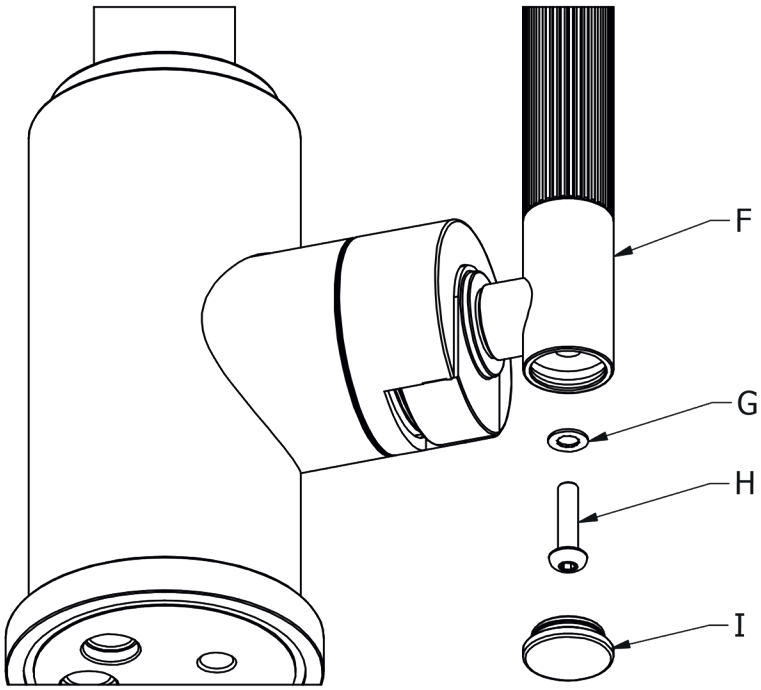

Fitting Instructions

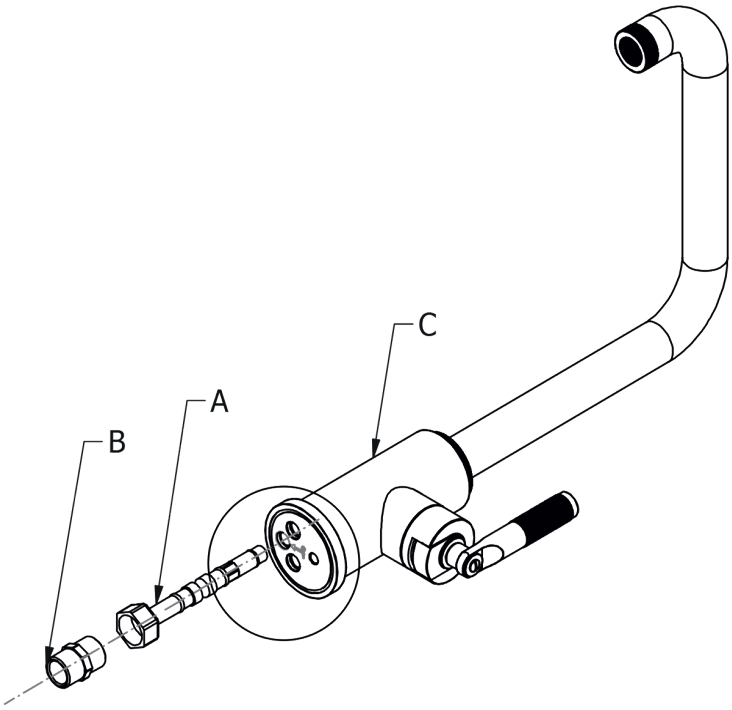

NOTE: This product can be installed either as a left handed or right handed product.

STEP 1:

1. Ensure flexi hose (A) is secured to threaded nipple (B).

2. Screw flexi hose (A) with nipple (B) attached, into designated hand spray outlet hole with highlighted hand spray graphic, as shown.

3. The remianing 2 x flexi hoses can be screwed in to either inlet hole, depending on customers preference of left hand or right hand lever orientation - See illustrations below.

LEFT HAND LEVER ORIENTATION

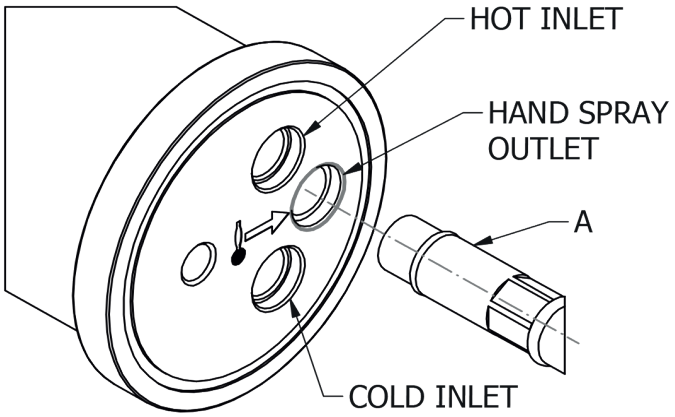

RIGHT HAND LEVER ORIENTATION

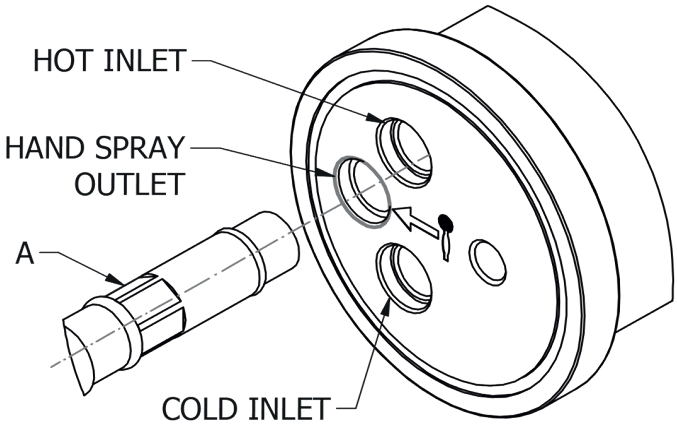

Fitting Instructions

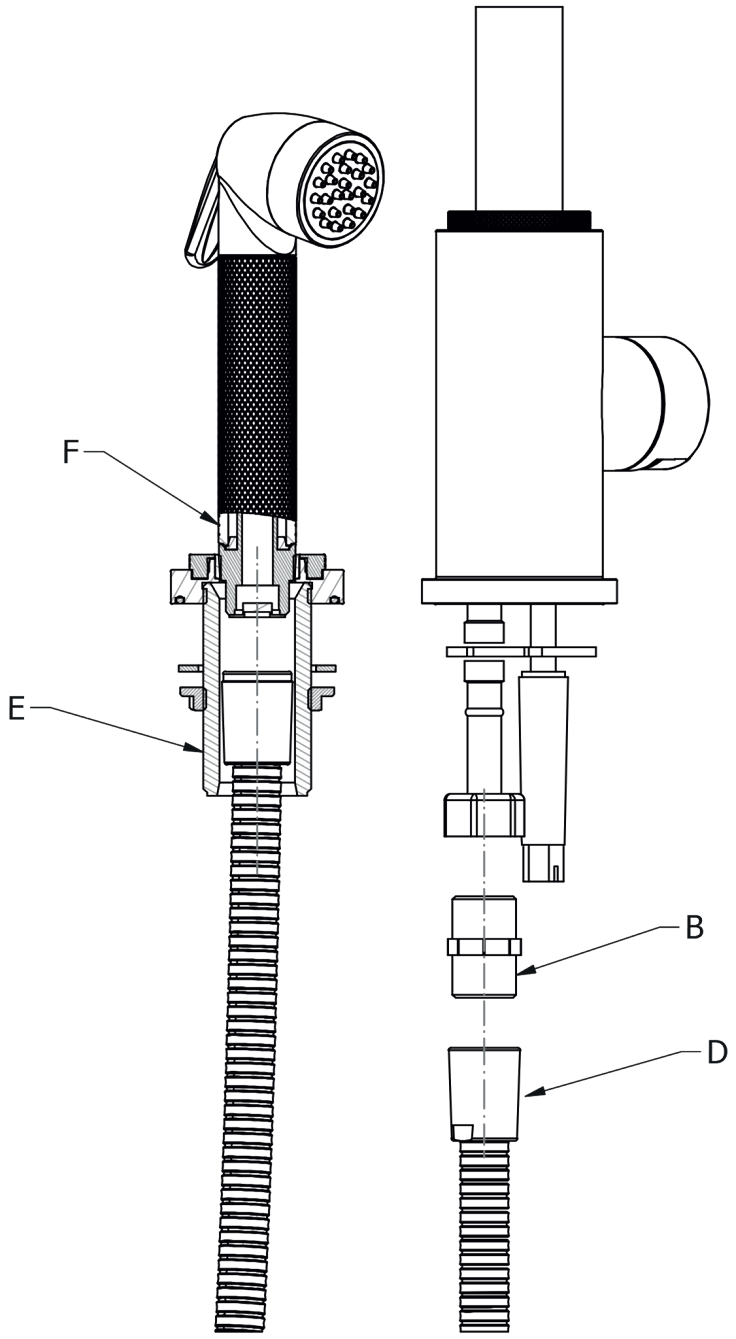

STEP 2:

4. Screw one end of hose (D) on to nipple (B).

5. Feed other end of hose (D) through hand spray holder (E) and screw it on to hand spray (F).

Accessing the cartridge

STEP 1:

1. To remove / service the cartridge, begin by removing the control lever.

2. Using an allen key, unscrew adaptor (A).

3. Remove screw (B) and washer (C), this will allow you to then remove lever head (D).

4. Using a small amount of force, pull rotating collar (E) from locking ring (F).

5. Locking ring (F) can then be unscrewed to expose cartridge (G) for servicing / removal.

6. When re-assembling, screw (B) should be tightened up to a force of 0.90NM.

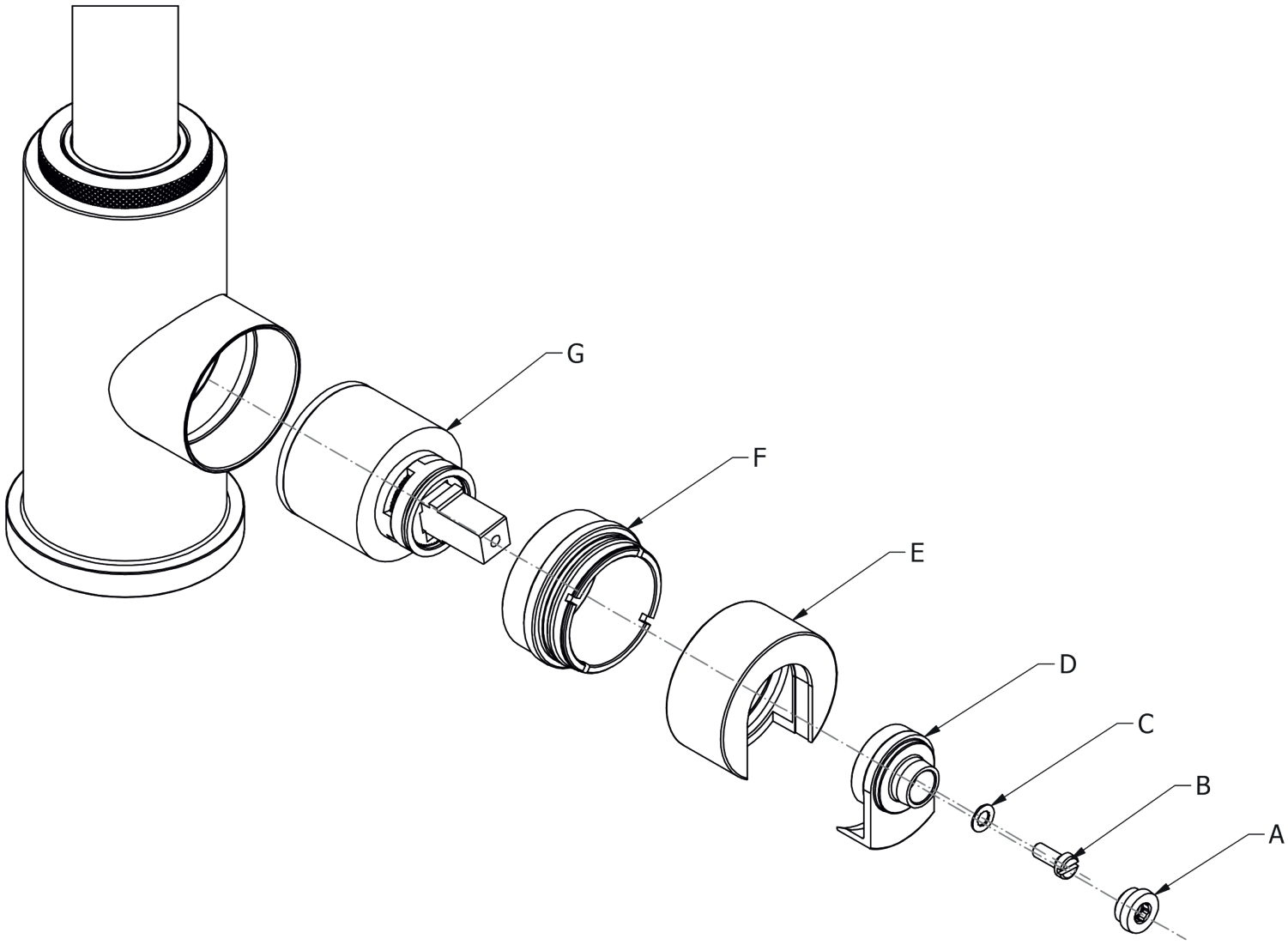

IMPORTANT NOTES

1. Installation should be carried out by a competent engineer in accordance with water regulations.
2. Before installation ensure supply pipes are flushed clean as debris or loose particles will affect the effiency of the ceramic disc cartridge.
3. For mixer taps it is recommended that hot & cold pressures are equally balanced.
4. To help maintain the high quality finish please clean with a soft damp cloth. Do not use abrasive polish or cleaners. Stains may be removed using diluted washing up liquid.
5. Ceramic cartridges in hard water areas. To prolong the lifespan and reduce servicing periods of your Samuel Heath tap we recommend that a suitable water softener be fitted. Consult your installer/designer for details.
6. Please note that as with all tap and shower ware it will be necessary from time to time for the products to be serviced, this should be carried out by a qualified Plumbing Engineer.

NOTES IMPORTANTES

1. L'installation doit être faite par un ingénieur qualifié, selon les réglements du Service Eau.
2. Avant l'installation, il faut s'assurer que les tuyaux d'approvisionnement sont complètement purgés. Les déchets flottants auront un effet détrimentaire sur l'efficacité de la cartouche céramique.
3. Il est recommandé que les pressions de l'eau chaude et eau froide des mitigeurs et mélangeurs soient maintenues à un niveau égal.
4. Pour conserver la finition de haute qualité, nettoyer avec un chiffon doux et humide. N'employer jamais de la cire et des produits abrasifs. Les tâches peuvent être enlevées à l'aide de liquide vaisselle pur.
5. Cartouches en céramique dans les régions à eau calcaire. Pour prolonger la durée et réduire l'entretien de votre robinetterie Samuel Heath, nous recommandons d'utiliser un adoucisseur d'eau convenable. Veuillez consulter votre installateur/fournisseur pour plus de renseignements.
6. Veuillez noter qu'un entretien sera nécessaire de temps en temps et doit être effectué par un installateur qualifié.

WICHTIGE HINWEISE

1. Installation sollte durch einen kompetenten Fachmann und nach den üblichen Vorschriften ausgeführt werden.
2. Vor Installation Wasserleitung gründlich durchspülen. Verschmutzung wird die Funktion der Kartusche erheblich einschränken.
3. Für Mischbatterien ist es wichtig, daß Wasser mit gleichem Druck eingefuhrt wird.
4. Um den optimalen Zustand dieses Produktes zu erhalten, wischen Sie es bitte nur mit einem feuchten, weichen Lappen ab. Auf keinen Fall Scheuermittel verwenden. Flecken lassen sich mit unverdünntem Geschirrspülmittel entfernen.
5. Keramikkartuschen in Hartwasserbereichen. Um die Lebensdauer zu verlängern und Wartungszeiten zu reduzieren empfiehlt Samuel Heath den Einsatz eines geeigneten Wasserenthärters. Fragen Sie Ihren Installateur/Designer um Rat.
6. Bitte merken Sie, dass alle Armaturen ab und zu eine Wartung brauchen. Diese soll durch einen kompetenten Installateur ausgeführt werden.

ATENCION

1. La instalación se debe realizar por un fontanero.
2. Antes de la instalación, deben pulgar las tuberias dejándo correr el agua por las tuberias para que arrastren los residuos de montaje/obra, con el motivo de que no afecte la eficacia del cartucho de ceramica.
3. Para grupo baño/ducha se recomienda que las presiones del agua caliente y frio sean equilibradas.
4. Para ayudar a mantener el acabado de este producto, limpiar con un paño húmedo suave. No se debe emplear productos abrasivos de baño. Las manchas se pueden quitar empleándo liquido lava-vajillas puro.
5. Cartuchos cerámicos en áreas de aguas duras . Para prolongar su vida útil y reducir los periodos de reparación de su grifo SamuelHeath recomendamos la instalación de un descalcificador de agua. Consulte a su instalador para más detalles.
6. Igual que con todo tipo de griferia y duchas, de vez en cuando será necesario llevar a cabo una revisión al producto; esto deberia ser realizado por un fontanero calificado.

ATTENZIONE

1. L'impianto deve essere montato da personale tecnico in conformità alle vigenti leggi.
2. Prima dell'installazione assicurarsi che le tubature dell' aqua siano pulite. Detriti o residui di lavorazione compromettono l'efficenza del cartuccio.
3. Per i gruppi, si raccomanda che le pressioni acqua calda e acqua fredda siano ugualmente bilanciate.
4. Per mantenere la finizione di ottima qualità, pulire con un panno soffice e inumidito. Non usare creme lucidanti e materiali abrasivi. Le macchie potranno essere tolte usando del detersivo per piatti puro.
5. Come con tutti i tipi di rubinetti e docce, di volta in volta è necessario effettuare una revisione al prodotto; questo dovrebbe essere fatto da un idraulico qualificato.

SAMUEL HEATH

Head Office and Customer Service
Leopold Street
Birmingham
England
B12 0UJ

T: +44 (0)121 766 4200
F: +44 (0)121 772 3334

Info@samuel-heath.com
www.samuel-heath.co.uk

US Customer Service
usa@samuel-heath.com
Federal I.D. No. 58-1504682
www.samuel-heath.com

8-40665
Issue: F