SAMUEL HEATH

# Product Data Sheet

## T1048/ T1048-A 4 Hole Deck Mounted Bath/Tub Filler

**T1048-R**

**- Available Control Options -**

**T1048-LA**

**T1036-LB**

**T1036-CBR**

**T1036-CCR**

## Flow Rates

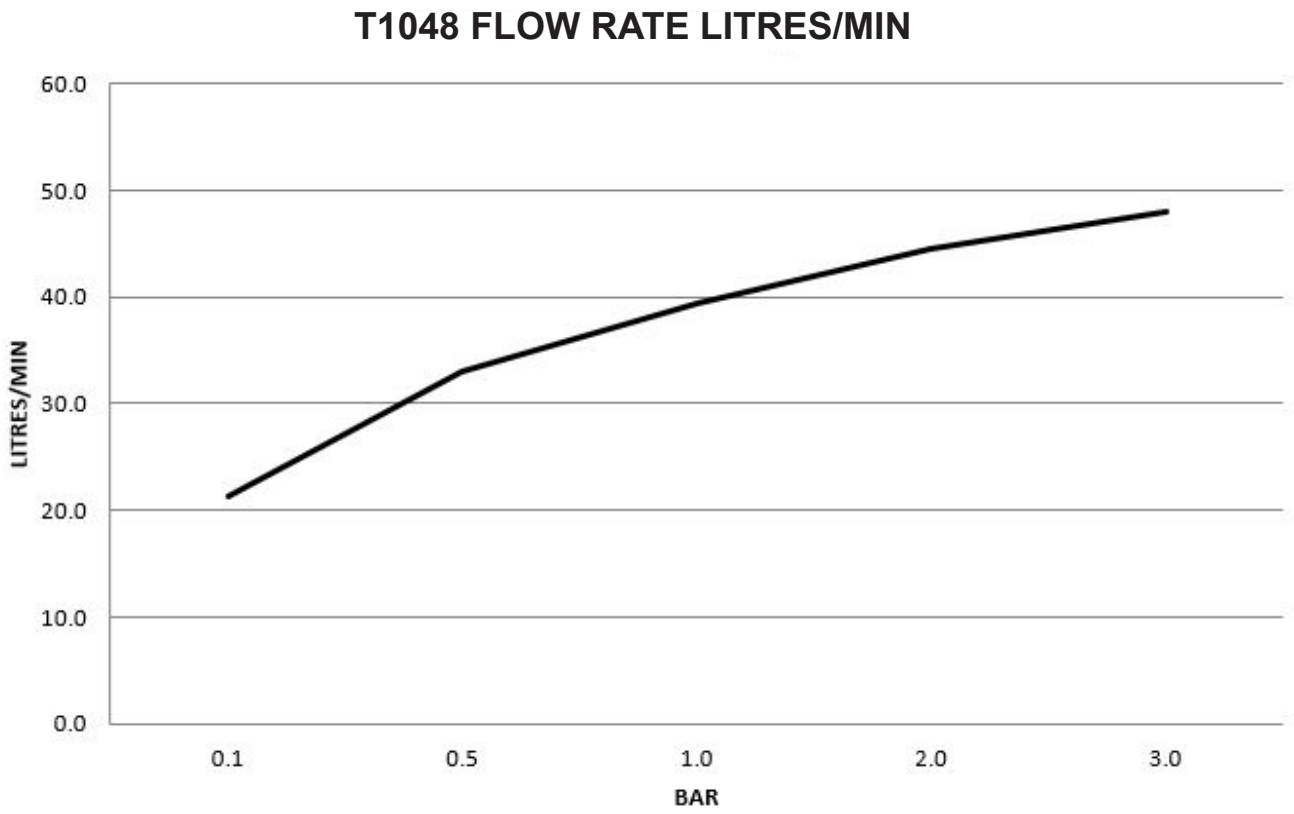


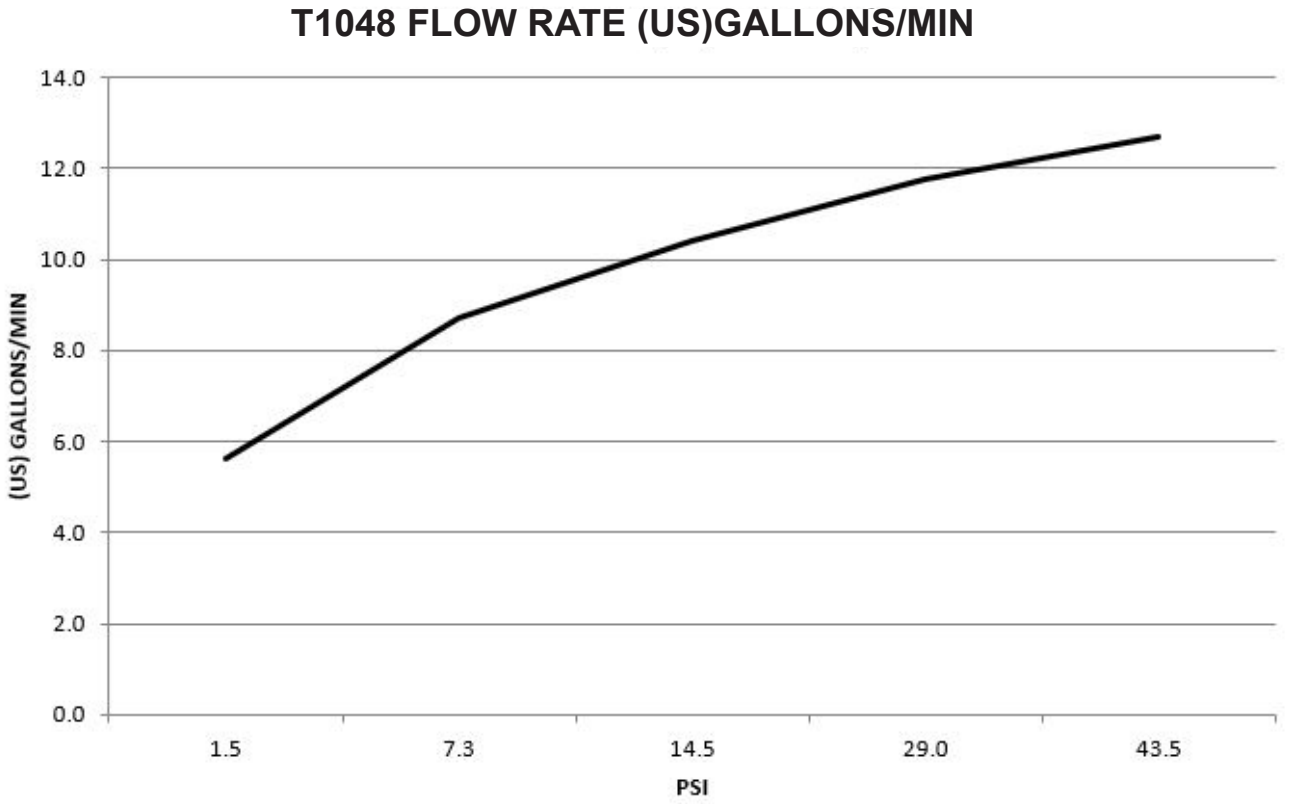


The flow rate data provided in this document is indicative of each product and is given in an open outlet condition. Installation design, external connections and fittings not supplied may affect the data provided.

# Dimension Key

## T1048-LA

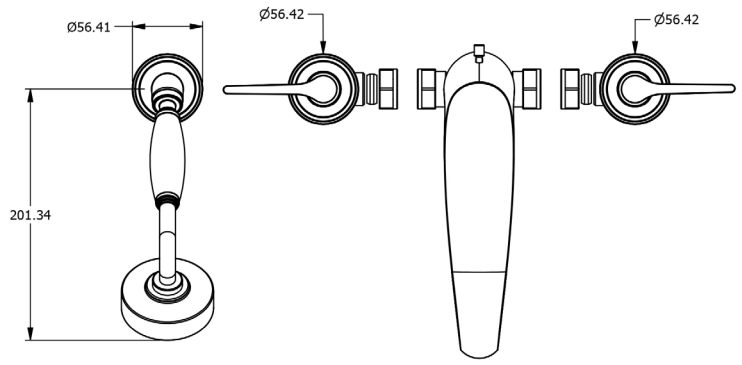


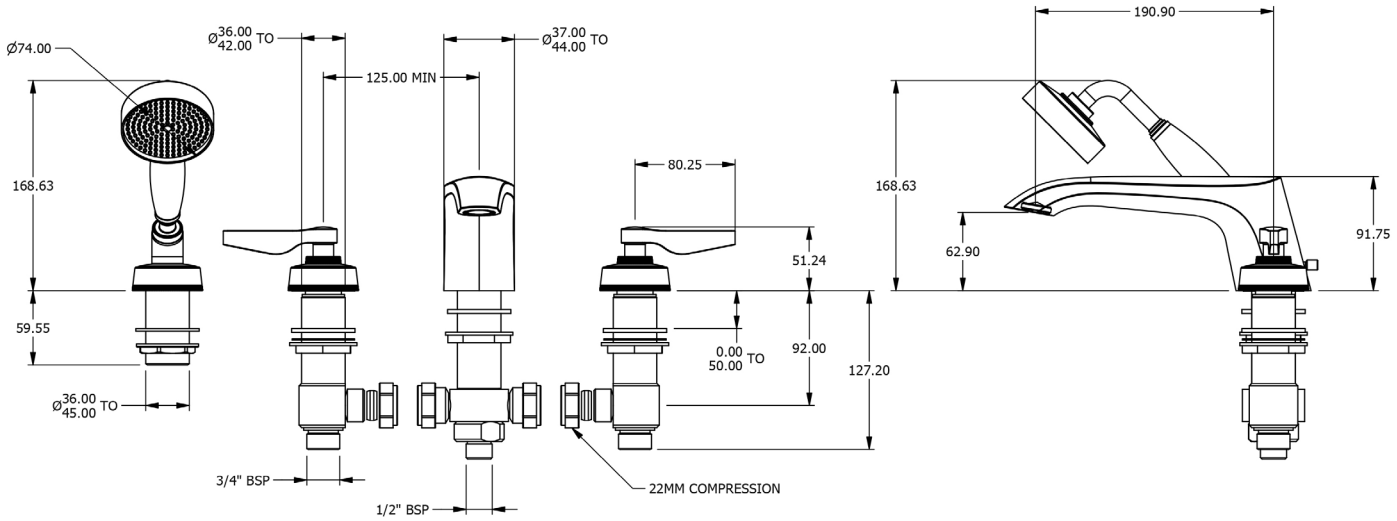


## T1048-LB

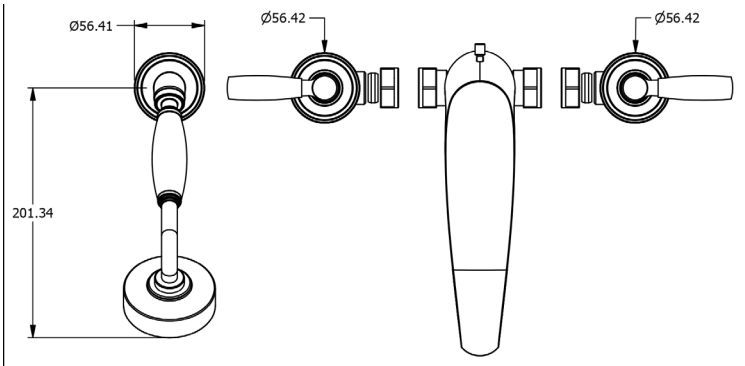


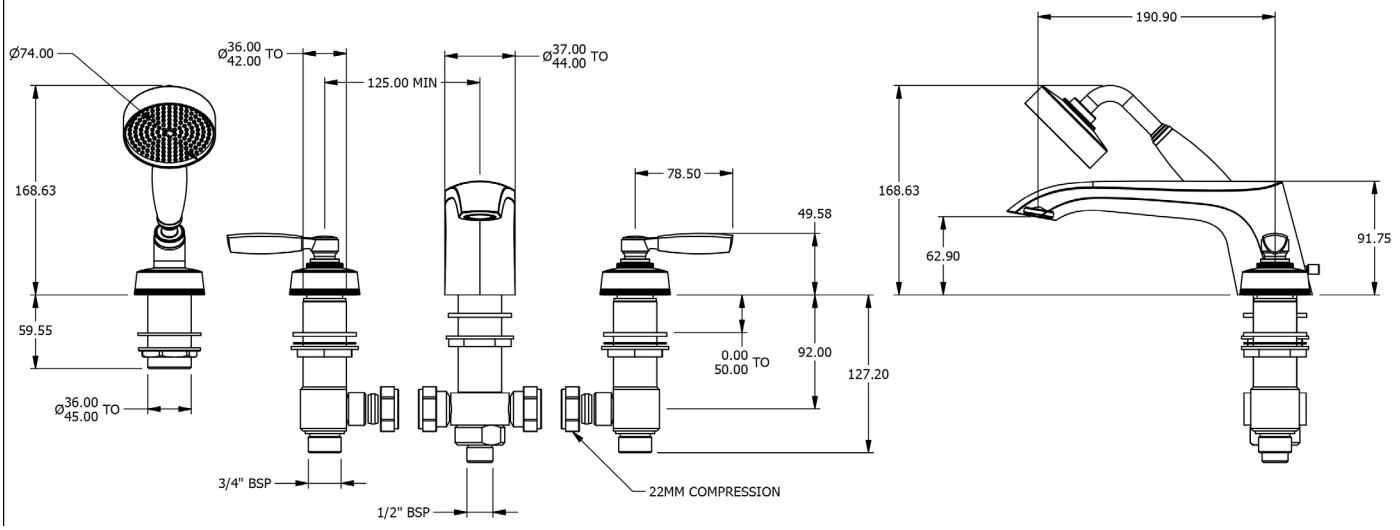

# Dimension Key

## T1048-R

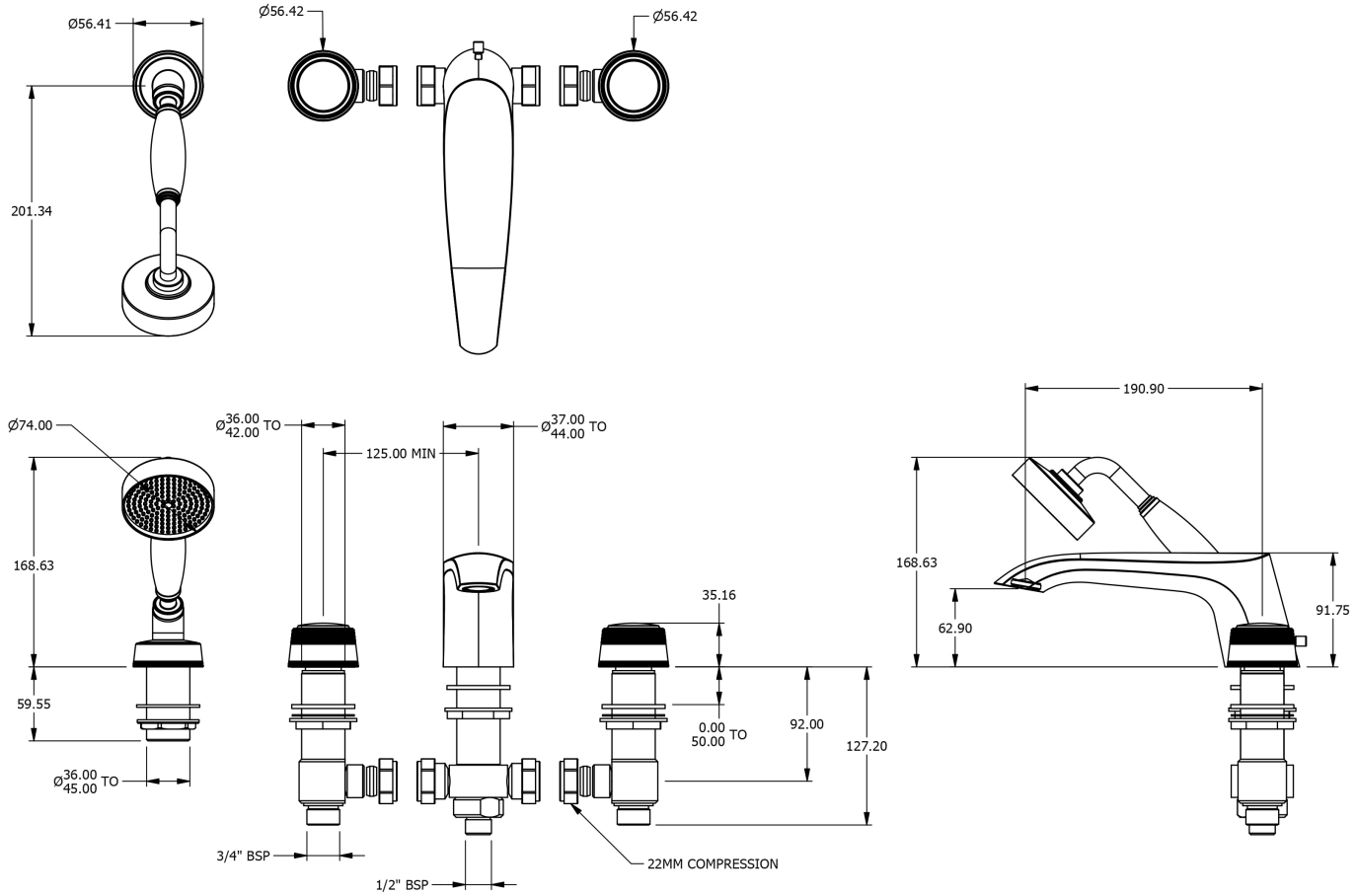


## T1048-CBR/ T1048-CCR

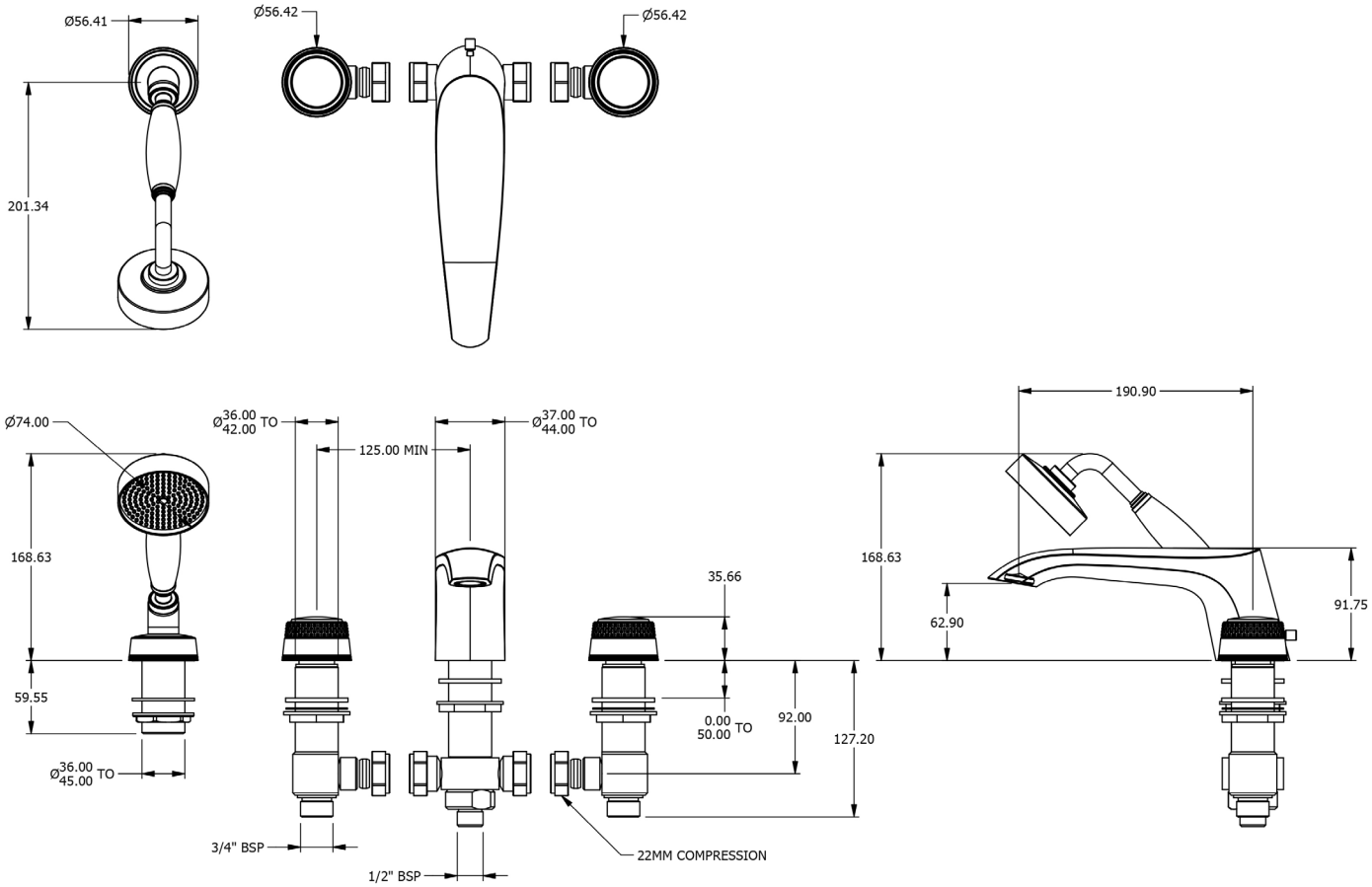

# Dimension Key

## T1048A-LA

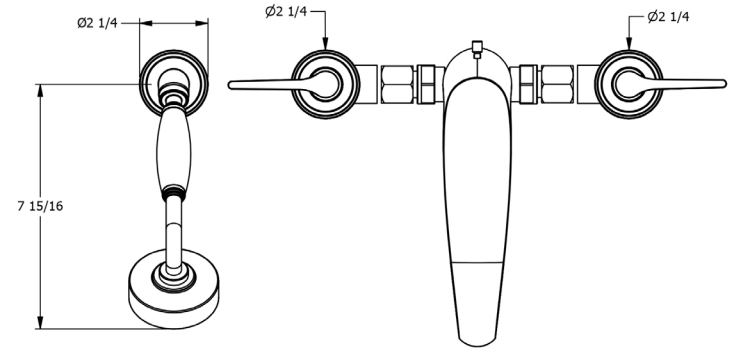


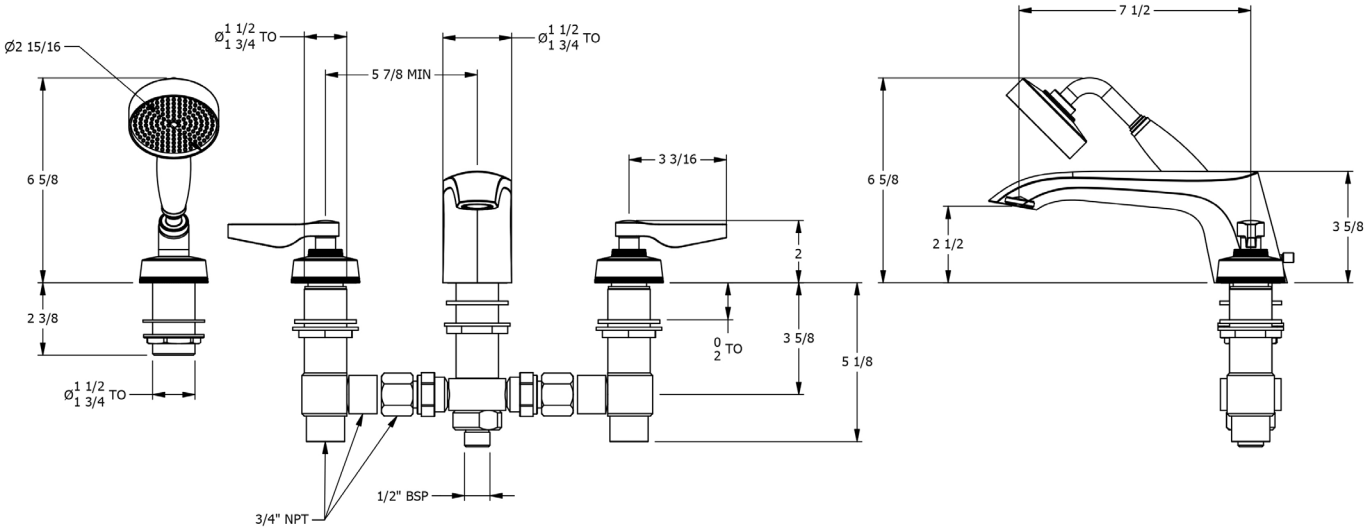


## T1048A-LB

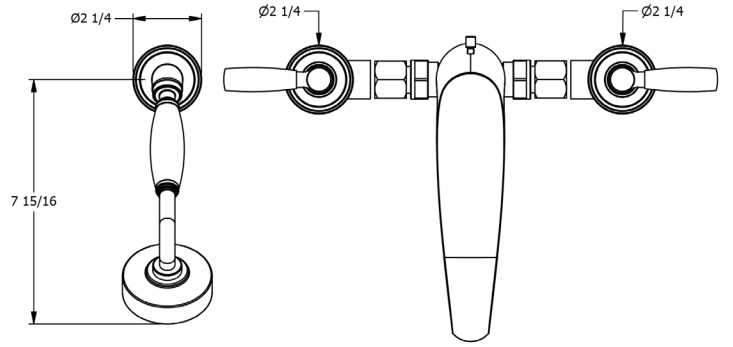


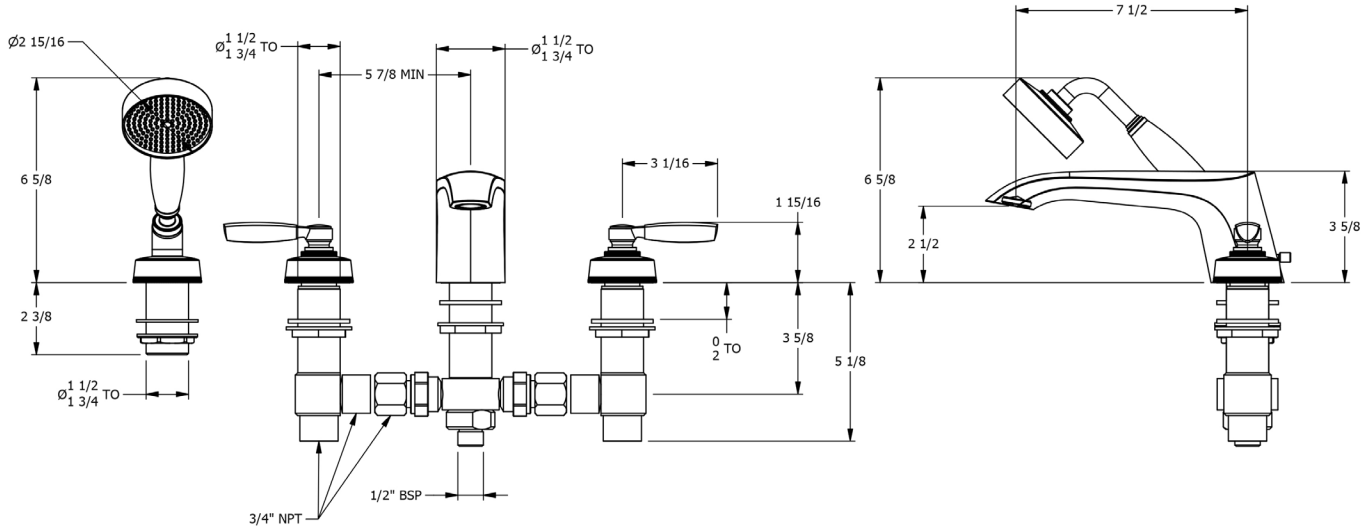

# Dimension Key

## T1048A-R

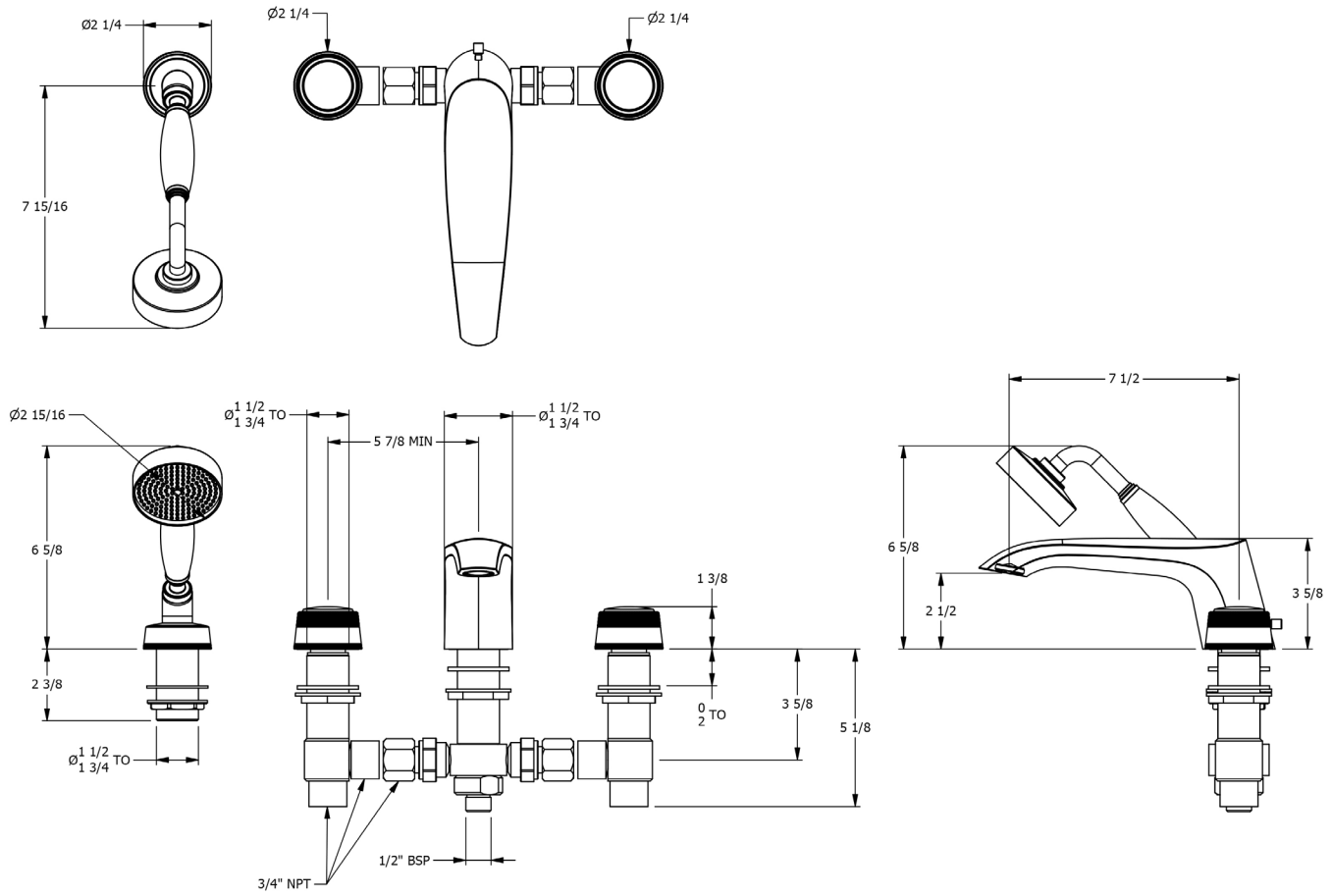


## T1048A-CBR/ T10A48-CCR

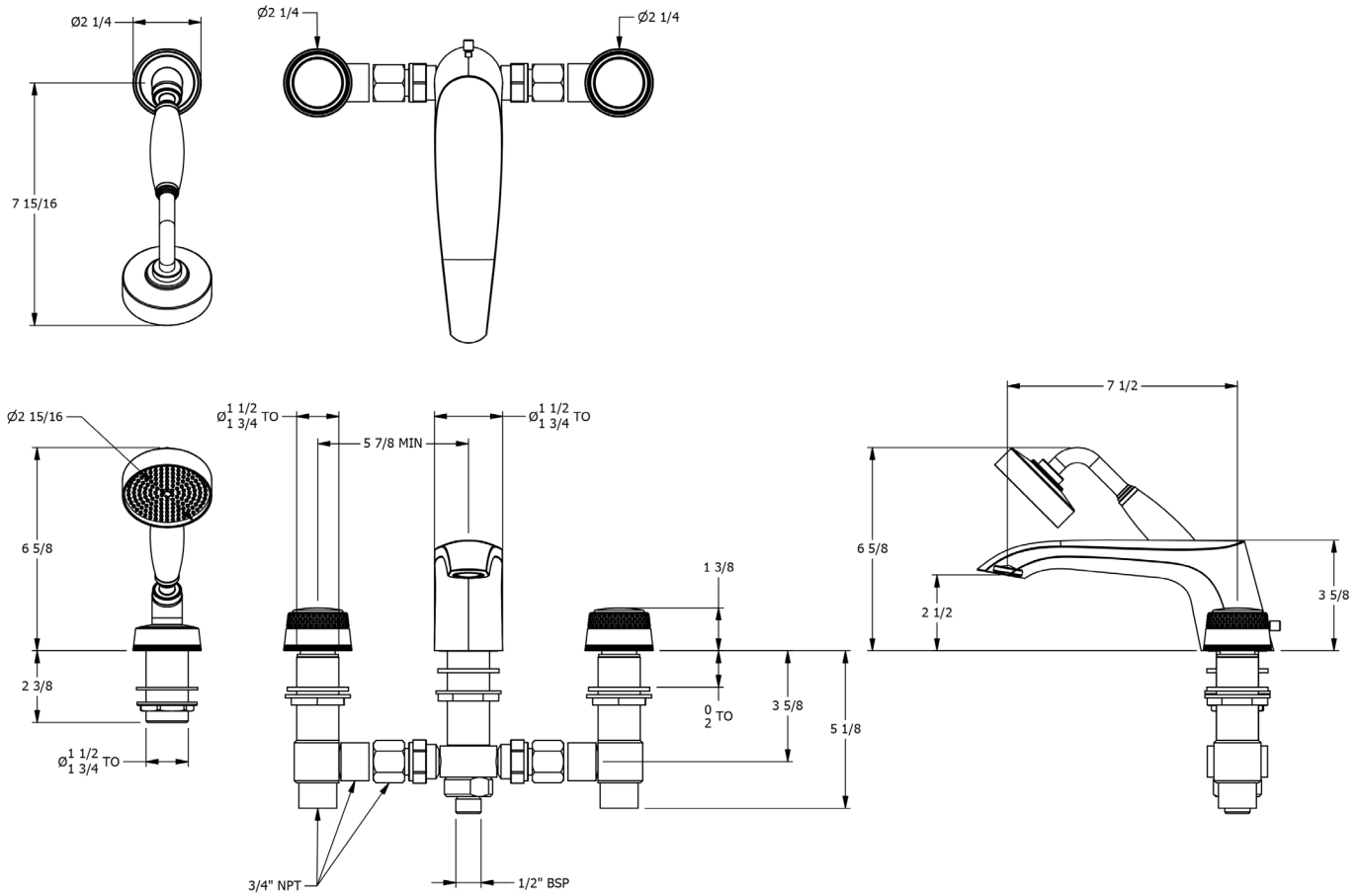

## Spares Information

**T1048**

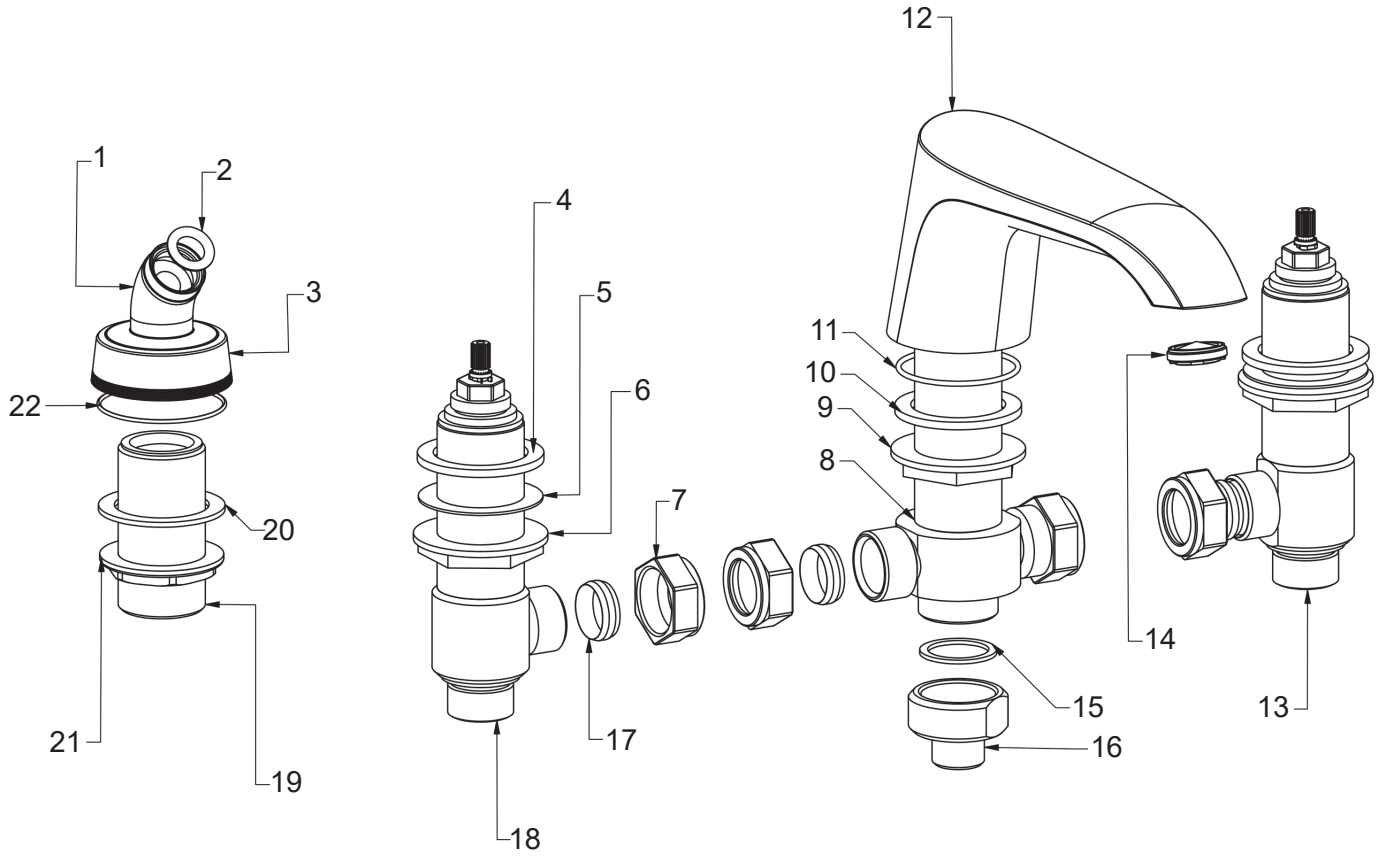


| Item | Part No. | Description | Item | Part No. | Description |
|---|---|---|---|---|---|
| **1** | - | Elbow | **12** | - | Spout Assembly |
| **2** | - | O Ring | **13** | **VS56091** | Side Valve |
| **3** | - | Side Valve Assembly | **14** | - | Flow Restrictor |
| **4** | - | Rubber Washer | **15** | - | Washer |
| **5** | - | Washer | **16** | - | Handset Connector |
| **6** | - | Backnut | **17** | - | Olive |
| **7** | - | Compression nut | **18** | **VS56090** | Side Valve |
| **8** | - | Body | **19** | - | Threaded Shank |
| **9** | - | Backnut | **20** | - | Washer |
| **10** | - | Rubber Washer | **21** | - | Nut |
| **11** | - | O Ring | **22** | - | O Ring |

## Spares Information

**T1048-A**

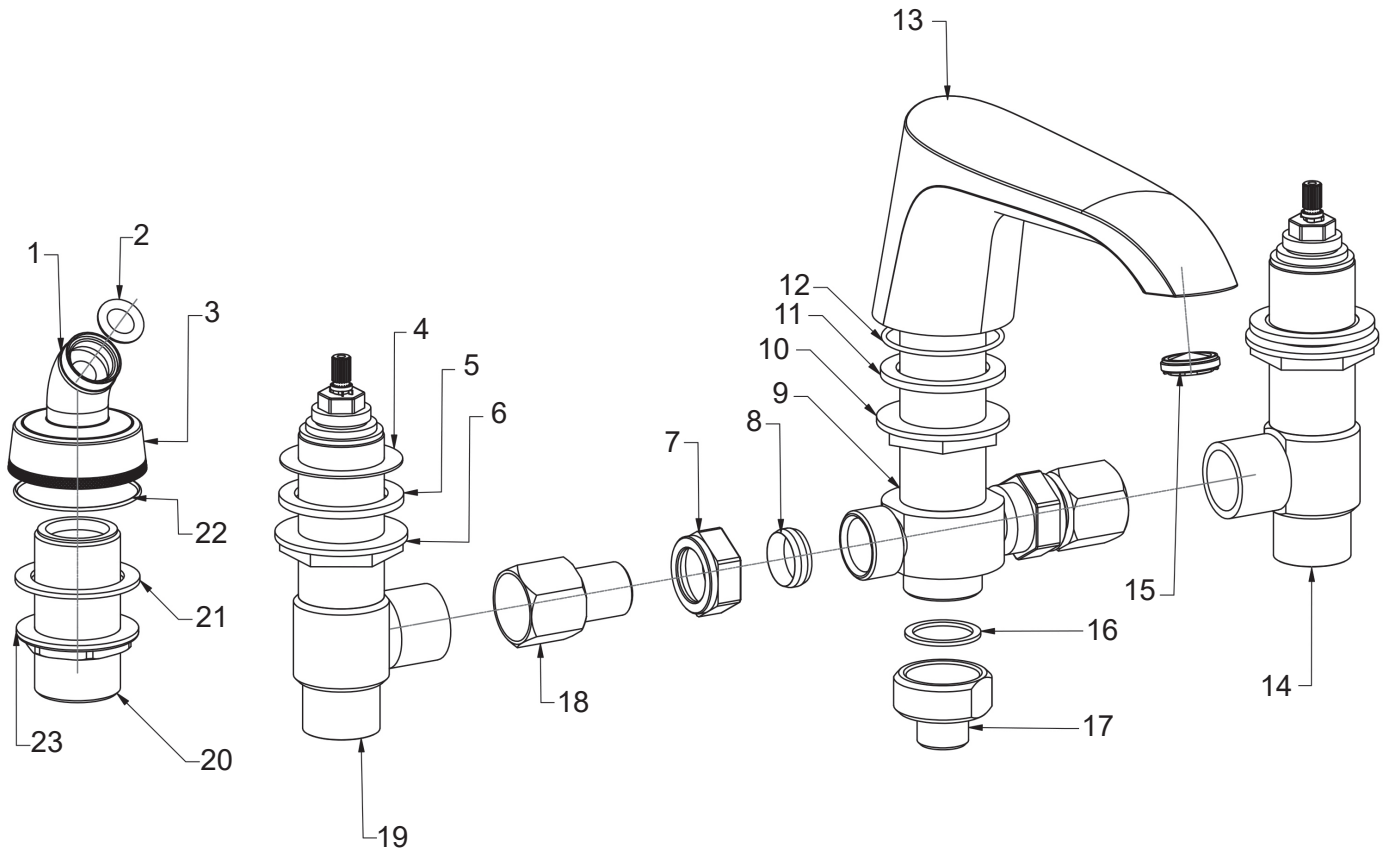


| Item | Part No. | Description | Item | Part No. | Description |
|---|---|---|---|---|---|
| **1** | - | Elbow | **13** | - | Spout Assembly |
| **2** | - | O Ring | **14** | **VS56093** | Side Valve |
| **3** | - | Side valve assembly | **15** | - | Flow Restrictor |
| **4** | - | Washer | **16** | - | Washer |
| **5** | - | Rubber Washer | **17** | - | Handset Connector |
| **6** | - | Backnut | **18** | - | Adapter |
| **7** | - | Compression nut | **19** | **VS56092** | Side Valve |
| **8** | - | Olive | **20** | - | Threaded Shank |
| **9** | - | Body | **21** | - | Washer |
| **10** | - | Backnut | **22** | - | O Ring |
| **11** | - | Rubber Washer | **23** | - | Nut |
| **12** | - | O Ring | | | |

## Installation

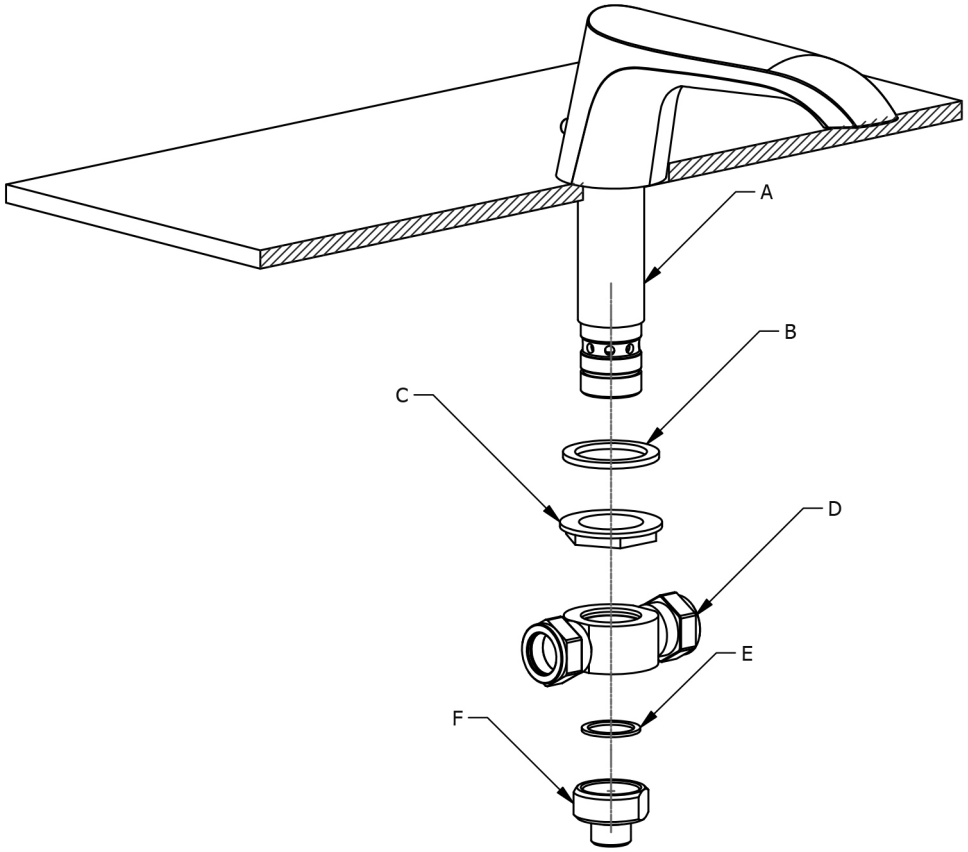


1. Remove all parts labelled (B to F) from spout assembly (A).

2. Lower spout assembly (A) through hole in deck.

3. Under the deck thread on and tighten washer (B), back nut (C).

4. Push manifold (D) onto the bottom of the spout assembly (A) and secure using washer (E) and hose outlet (F).

**Important note:** The instructions show the “LA” lever option, the assembly method and set up are the same for the “LB”, “R”, “CCR” and “CBR” handle options

## Replacing the diverter

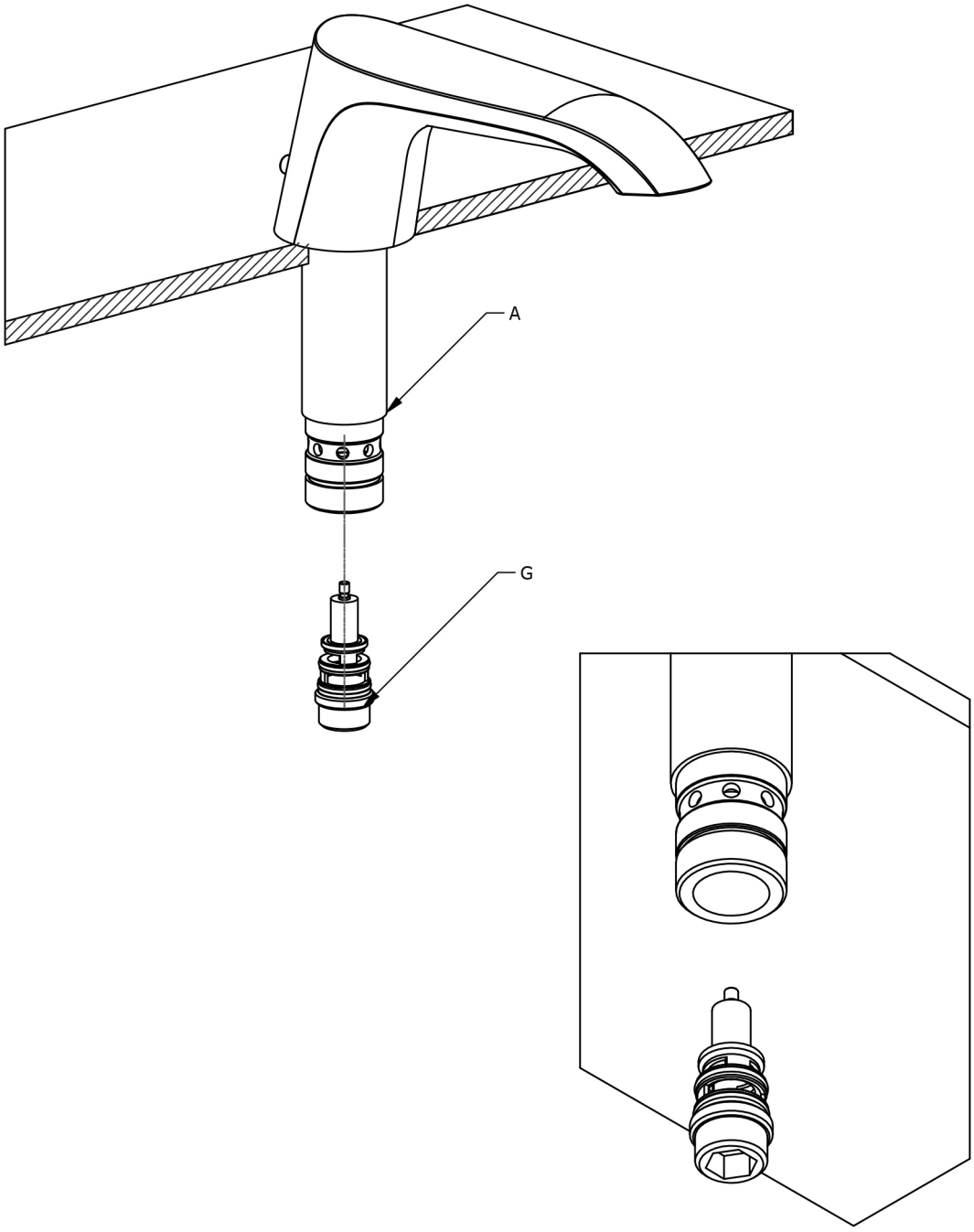


1. Remove all parts labelled B to F from spout assembly - *see previous page*.

2. Using an allen key to access the female hexagon (shown), unscrew & remove the faulty diverter (G) from spout tail (A).

3. Using the same allen key, screw the new diverter (G) into spout atil (A).

**Important note:** The instructions show the “LA” lever option, the assembly method and set up are the same for the “LB”, “R”, “CCR” and “CBR” handle options

## Replacing the diverter

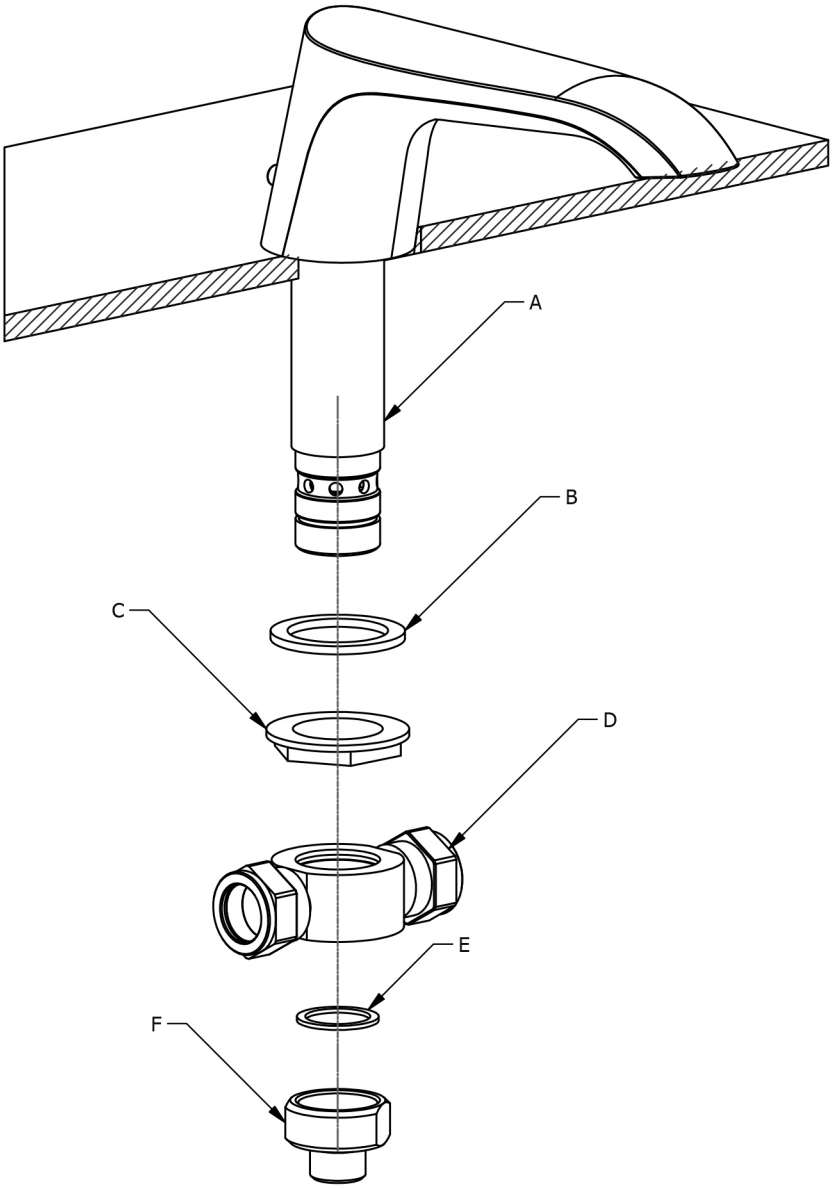


4. Re-assemble washer (B) and back nut (C) onto the spout assembly.

5. Push manifold (D) onto the bottom of spout tail (A) and secure using washer (E) and hose outlet (F).

**Important note:** The instructions show the “LA” lever option, the assembly method and set up are the same for the “LB”, “R”, “CCR” and “CBR” handle options

## IMPORTANT NOTES

1. Installation should be carried out by a competent engineer, in accordance with water regulations.
2. Before installation, ensure supply pipes are flushed clean. Debris or loose particles will affect the efficiency of the ceramic disc cartridge.
3. For mixer taps, it is recommended that hot & cold pressures are equally balanced.
4. To help maintain the high quality finish, please clean with a soft damp cloth. Do not use abrasive polish or cleaners. Stains may be removed using undiluted washing up liquid.
5. Ceramic cartridges in hard water areas. To prolong the lifespan and reduce servicing periods of your Samuel Heath tap we recommend that a suitable water softener be fitted. Consult your installer/designer for details.
6. Please note that as with all tap and shower ware it will be necessary from time to time for the products to be serviced, this should be carried out by a qualified Plumbing Engineer.

## NOTES IMPORTANTES

1. L'installation doit être faite par un ingénieur qualifié, selon les réglements du Service Eau.
2. Avant l'installation, il faut s'assurer que les tuyaux d'approvisionnement sont complètement purgés. Les déchets flottants auront un effet détrimentaire sur l'efficacité de la cartouche céramique.
3. Il est recommandé que les pressions de l'eau chaude et eau froide des mitigeurs et mélangeurs soient maintenues à un niveau égal.
4. Pour conserver la finition de haute qualité, nettoyer avec un chiffon doux et humide. N'employer jamais de la cire et des produits abrasifs. Les tâches peuvent être enlevées à l'aide de liquide vaisselle pur.
5. Cartouches en céramique dans les régions à eau calcaire. Pour prolonger la durée et réduire l'entretien de votre robinetterie Samuel Heath, nous recommandons d'utiliser un adoucisseur d'eau convenable. Veuillez consulter votre installateur/fournisseur pour plus de renseignements.
6. Veuillez noter qu'un entretien sera nécessaire de temps en temps et doit être effectué par un installateur qualifié.

## WICHTIGE HINWEISE

1. Installation sollte durch einen kompetenten Fachmann und nach den üblichen Vorschriften ausgeführt werden.
2. Vor Installation Wasserleitung gründlich durchspülen. Verschmutzung wird die Funktion der Kartusche erheblich einschränken.
3. Für Mischbatterien ist es wichtig, daß Wasser mit gleichem Druck eingefuhrt wird.
4. Um den optimalen Zustand dieses Produktes zu erhalten, wischen Sie es bitte nur mit einem feuchten, weichen Lappen ab. Auf keinen Fall Scheuermittel verwenden. Flecken lassen sich mit unverdünntem Geschirrspülmittel entfernen.
5. Keramikkartuschen in Hartwasserbereichen. Um die Lebensdauer zu verlängern und Wartungszeiten zu reduzieren empfiehlt Samuel Heath den Einsatz eines geeigneten Wasserenthärters. Fragen Sie Ihren Installateur/Designer um Rat.
6. Bitte merken Sie, dass alle Armaturen ab und zu eine Wartung brauchen. Diese soll durch einen kompetenten Installateur ausgeführt werden.

## ATENCION

1. La instalación se debe realizar por un fontanero.
2. Antes de la instalación, deben pulgar las tuberias dejándo correr el agua por las tuberias para que arrastren los residuos de montaje/obra, con el motivo de que no afecte la eficacia del cartucho de ceramica.
3. Para grupo baño/ducha se recomienda que las presiones del agua caliente y frio sean equilibradas.
4. Para ayudar a mantener el acabado de este producto, limpiar con un paño húmedo suave. No se debe emplear productos abrasivos de baño. Las manchas se pueden quitar empleándo liquido lava-vajillas puro.
5. Cartuchos cerámicos en áreas de aguas duras . Para prolongar su vida útil y reducir los periodos de reparación de su grifo Samuel Heath recomendamos la instalación de un descalcificador de agua. Consulte a su instalador para más detalles.
6. Igual que con todo tipo de griferia y duchas, de vez en cuando será necesario llevar a cabo una revisión al producto; esto deberia ser realizado por un fontanero calificado.

## ATTENZIONE

1. L'impianto deve essere montato da personale tecnico in conformità alle vigenti leggi.
2. Prima dell'installazione assicurarsi che le tubature dell' aqua siano pulite. Detriti o residui di lavorazione compromettono l'efficenza del cartuccio.
3. Per i gruppi, si raccomanda che le pressioni acqua calda e acqua fredda siano ugualmente bilanciate.
4. Per mantenere la finizione di ottima qualità, pulire con un panno soffice e inumidito. Non usare creme lucidanti e materiali abrasivi. Le macchie potranno essere tolte usando del detersivo per piatti puro.
5. Come con tutti i tipi di rubinetti e docce, di volta in volta è necessario effettuare una revisione al prodotto; questo dovrebbe essere fatto da un idraulico qualificato.

SAMUEL HEATH

**Head Office and Customer Service**
Leopold Street
Birmingham
England
B12 0UJ

T: +44 (0)121 766 4200
F: +44 (0)121 772 3334

Info@samuel-heath.com
www.samuel-heath.co.uk

**US Customer Service**
usa@samuel-heath.com
Federal I.D. No. 58-1504682
www.samuel-heath.com

**8-40652**
**Issue: A**