SAMUEL HEATH

Product Data Sheet

T10K17-1/T10KA17-1/T10K17-2/T10KA17-2
3-Hole Wall-Mounted Basin/Lavatory Filler

T10K17-1R

- Available Control Options -			
T10K17-1CBR	**T10K17-1CCR**	**T10K17-1LA**	**T10K17-1LB**
T10K17-2CBR	**T10K17-2CCR**	**T10K17-2LA**	**T10K17-2LA**

Dimension Key

T10K17-LA

T10K17-1: A = 249mm to 260mm
B = 174 mm

T10K17-2: A = 288mm to 299mm
B = 213 mm

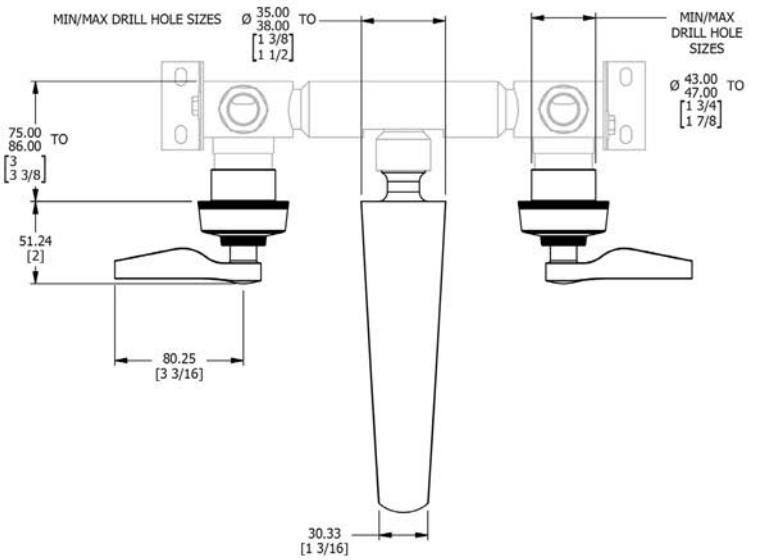

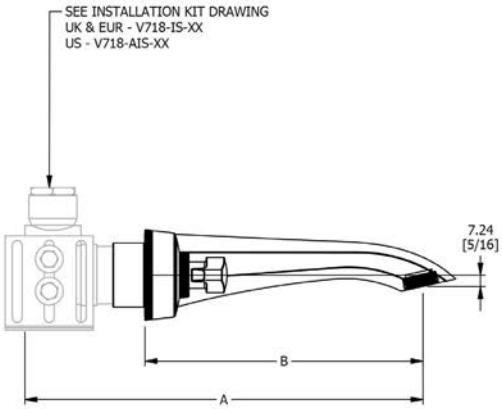

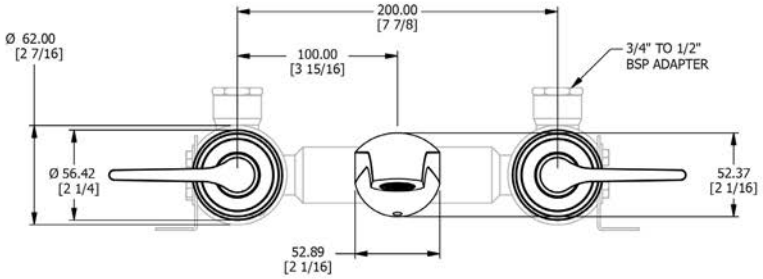

T10K17-LB

T10K17-1: A = 249mm to 260mm
B = 174 mm

T10K17-2: A = 288mm to 299mm
B = 213 mm

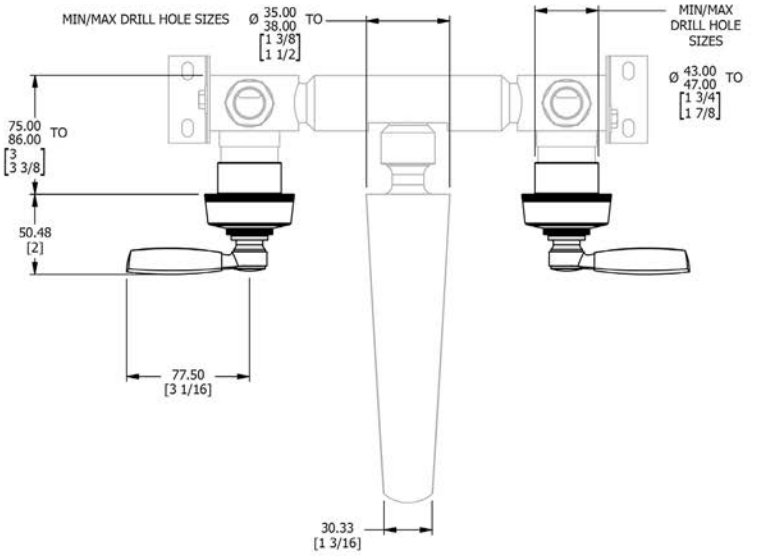

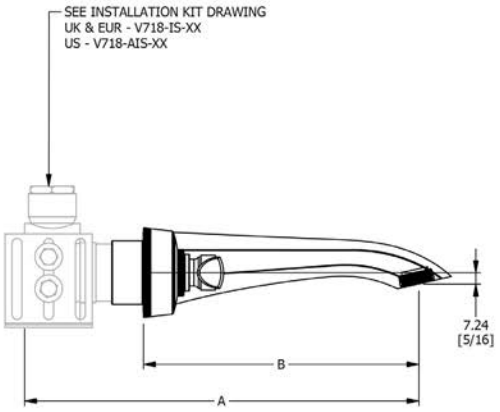

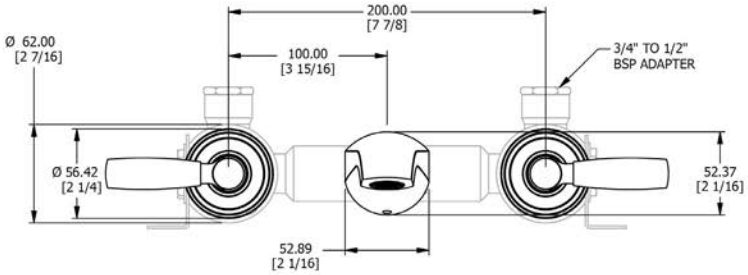

Dimension Key

T10K17-R

T10K17-1: A = 249 mm to 260mm
B = 174 mm

T10K17-2: A = 288 mm to 299mm
B = 213 mm

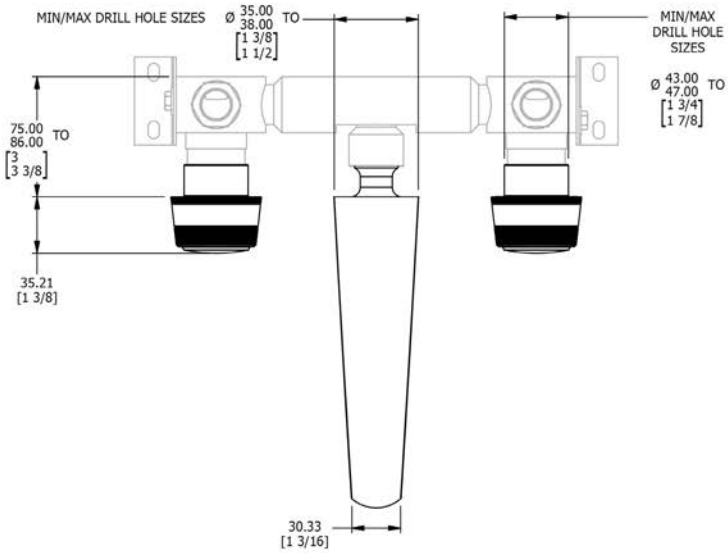

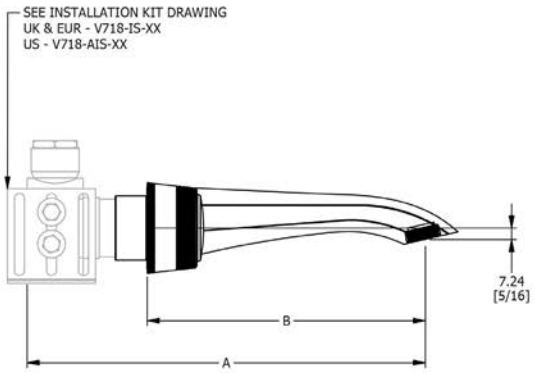

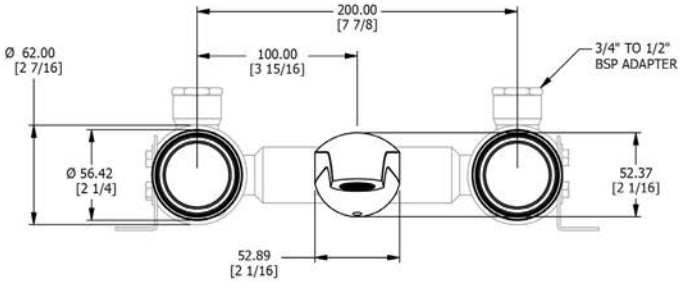

T10K17-CBR/T10K17-CCR

T10K17-1: A = 249 mm to 260mm
B = 174 mm

T10K17-2: A = 288 mm to 299mm
B = 213 mm

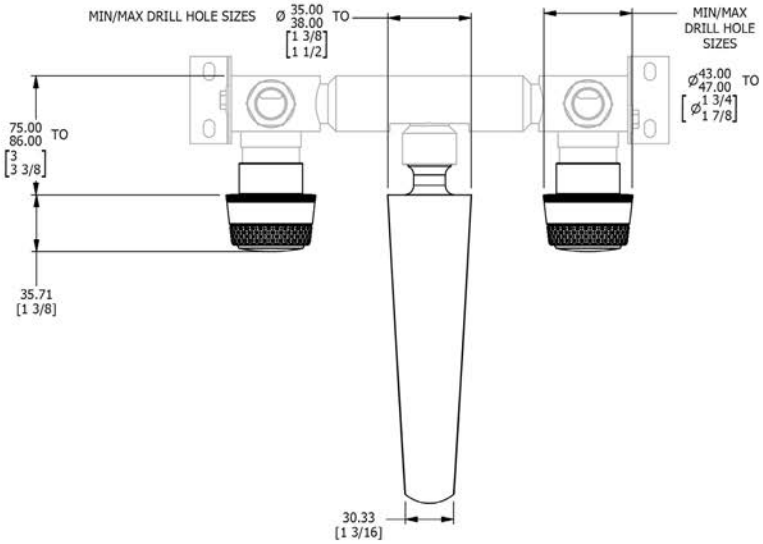

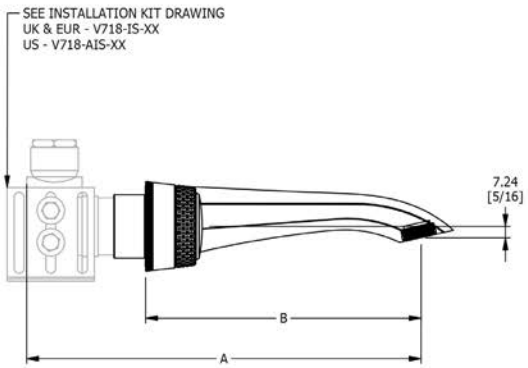

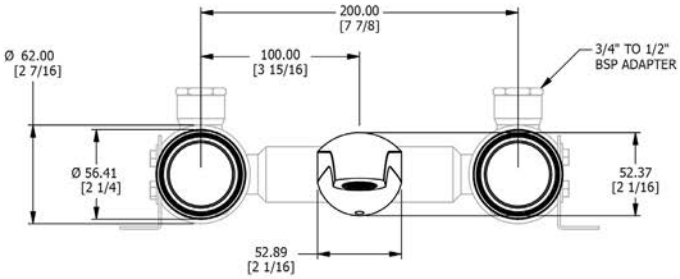

Spares Information

T1017

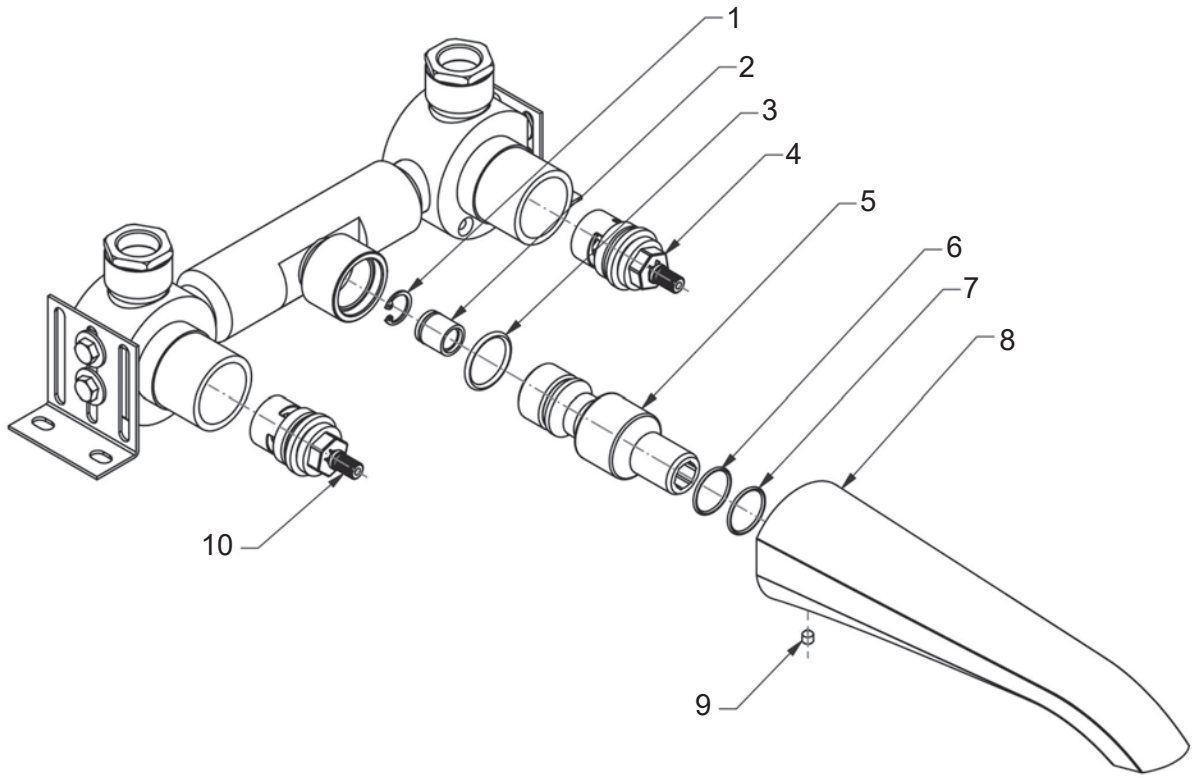

Item	Part No.	Description
1	-	Circlip
2	-	Check Valve Flow Regulator
3	-	O Ring
4	VS56043	CD Valve (Clockwise closing)
5	-	Spout Extension
6	-	O Ring
7	-	O Ring
8	-	Spout
9	-	Set Screw
10	VS56044	CD Valve (Anti-clockwise closing)

Spares Information
T1017-A

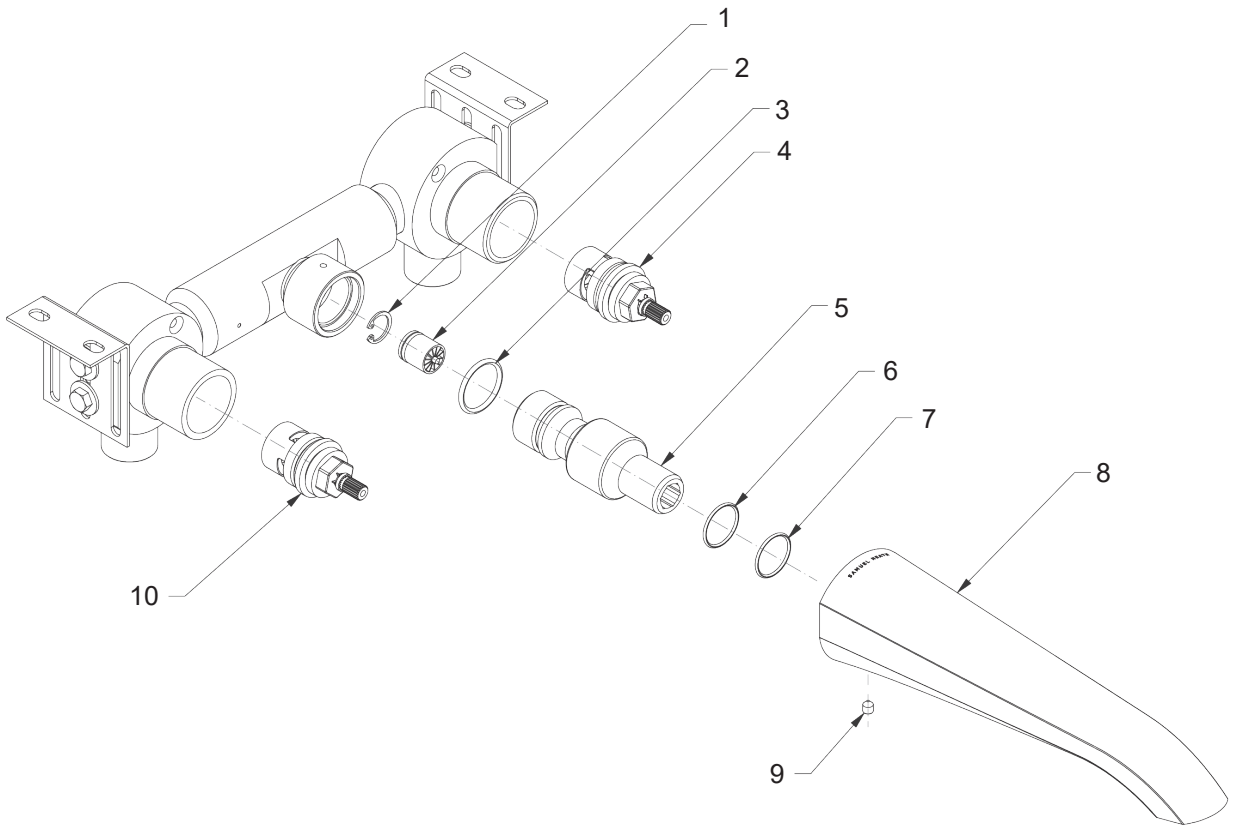

Item	Part No.	Description
1	-	Circlip
2	-	Check Valve Flow Regulator
3	-	O Ring
4	VS56043-LL	CD Valve (Clockwise closing)
5	-	Spout Extension
6	-	O Ring
7	-	O Ring
8	-	Spout
9	-	Set Screw
10	VS56044-LL	CD Valve (Anti-clockwise closing)

Flow Rates
T1017

Bar	1.0	2.0	3.0	4.0	5.0
L.P/M Pattern	3.4	4.9	6.2	7.2	8.2

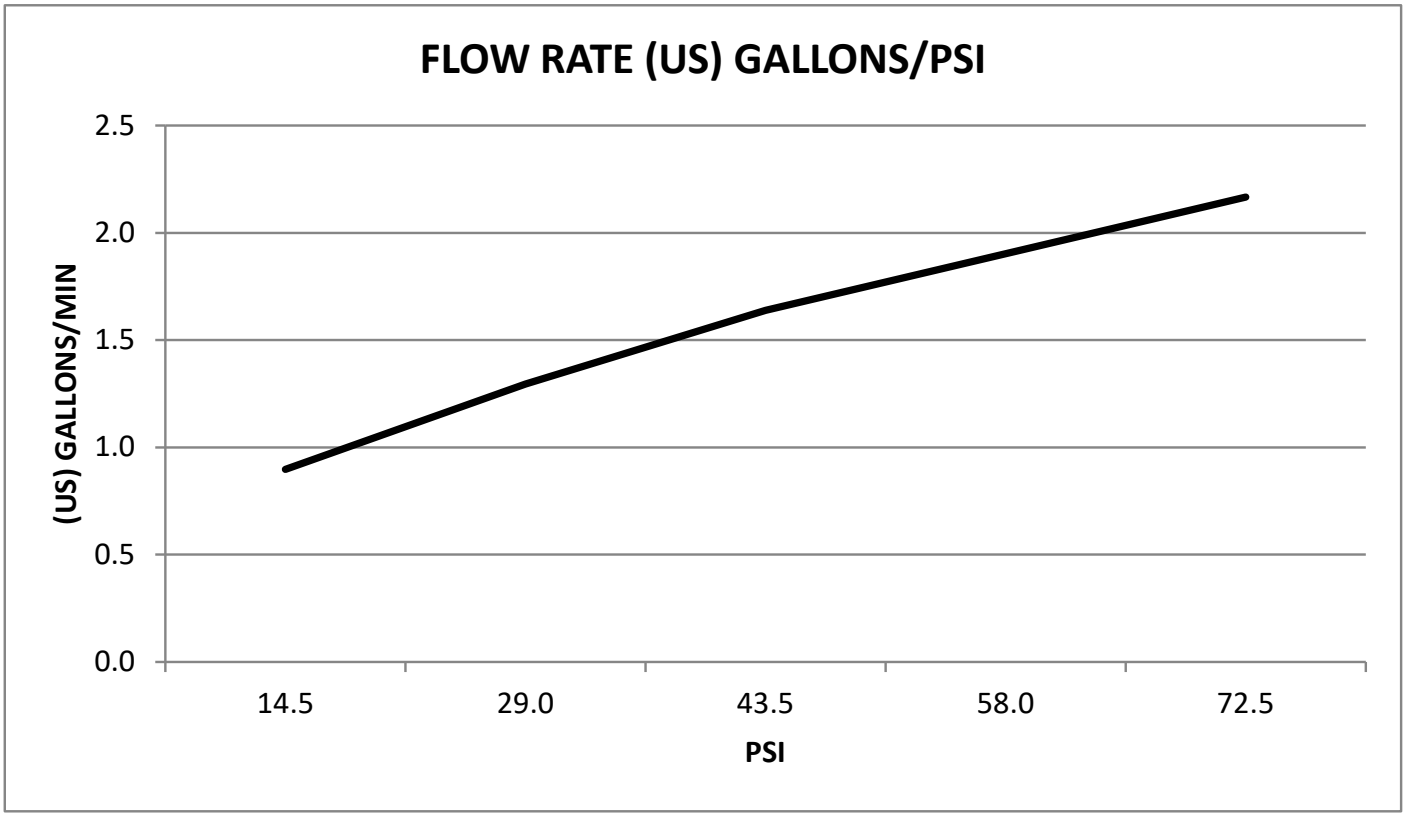

PSI	14.5	29.0	43.5	58.0	72.5
L.P/M Pattern	0.9	1.3	1.6	1.9	2.2

The flow rate data provided in this document is indicative of each product and is given in an open outlet condition. Installation design, external connections and fittings not supplied may affect the data provided.

Installation

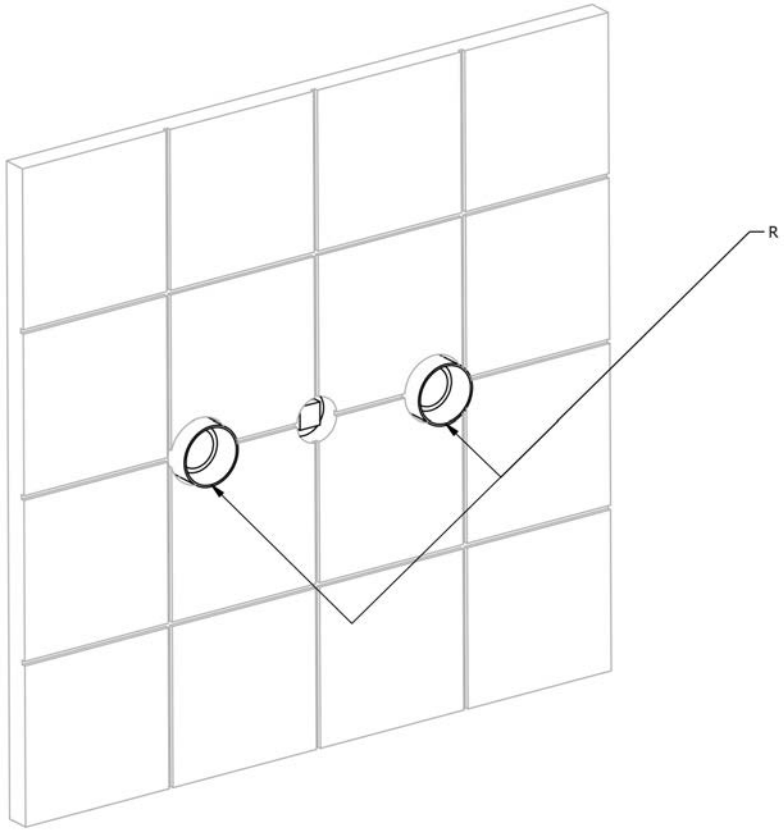

1. Install the finished surface, ensuring the finished surface is in accordance with the minimum and maximum installation depths shown on the drawings in the front of this booklet.

2. Remove the thread covers (R).

Important note: The instructions show the “LA” lever option, the assembly method and set up are the same for the “LB”, “R”, “CCR” and “CBR” handle options

Installation

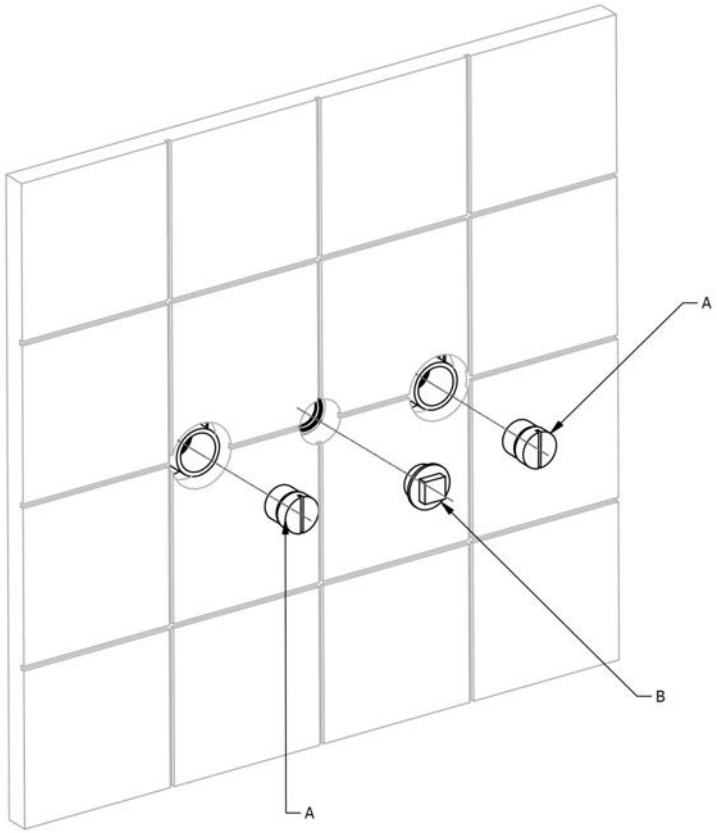

3. Ensure the supply to the installation system is isolated.

4. Remove side valve bungs (A) and spout outlet cap (B).

Important note: The instructions show the “LA” lever option, the assembly method and set up are the same for the “LB”, “R”, “CCR” and “CBR” handle options

Installation

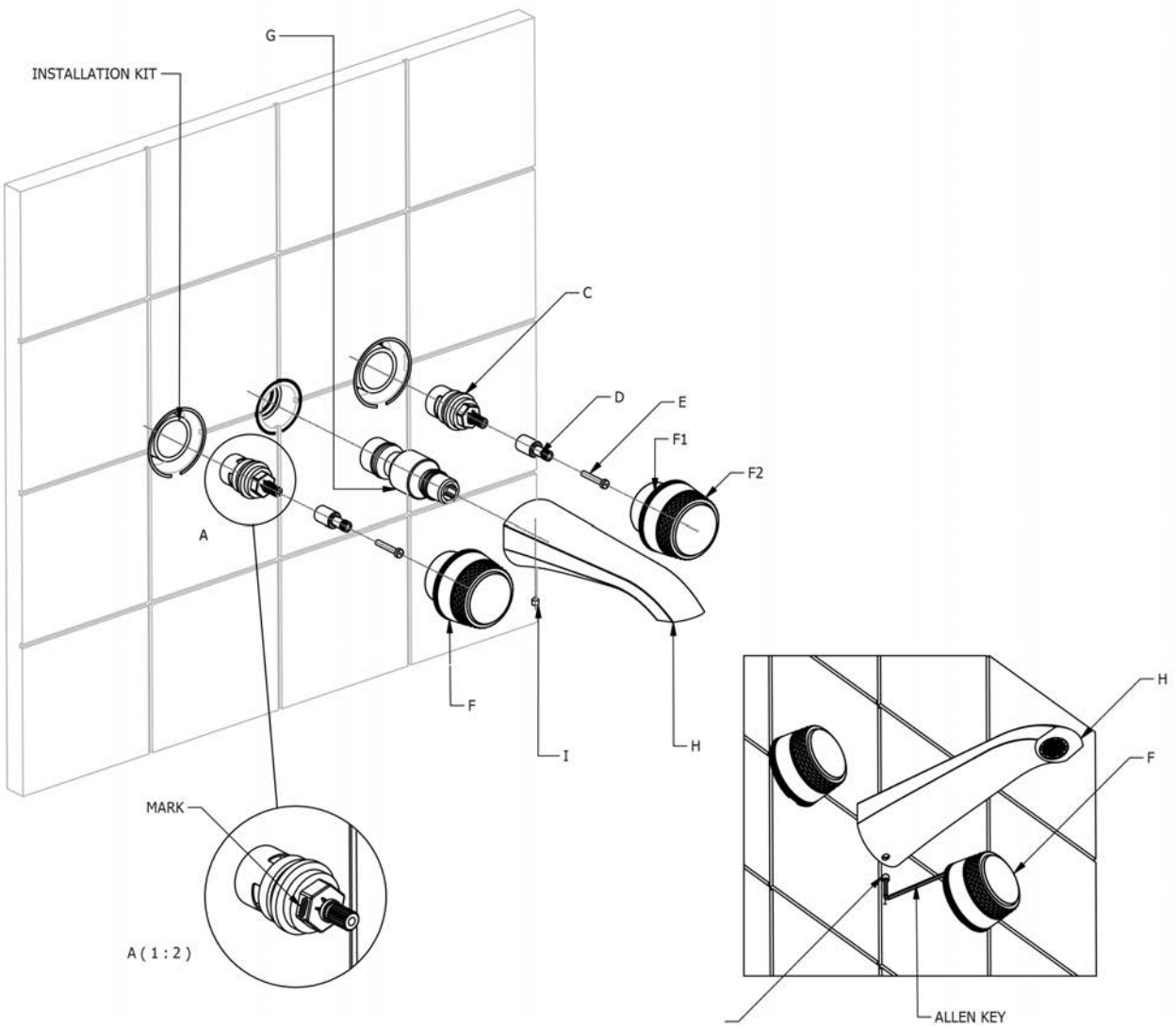

5. Screw CD valves (C) into the installation kit, ensuring that the left hand CD valve has the mark as shown. Ensure CD valves are fully tightened.

6. Push spindle adapters (D) onto CD valves (C) and secure using long screws.

7. Apply suitable silicone sealant to the wall where the side valve assembly (F) will sit. Screw lever/roundel bodies (F1) onto the CD valve (C), while at the same time holding lever/roundel controls (F2) stationary.

8. Screw spout tail (G) into the installation kit. Ensure the spout tail (G) is fully tightened using a 12mm Allen key.

9. Apply suitable silicone sealant to the wall where spout (H) will sit. Slide spout (H) onto spout tail (G).

10. Align spout (H) and secure using grub screw (I) and an Allen key as shown. Ensure grub screw (I) is fully tightened.

Important note: The instructions show the “LA” lever option, the assembly method and set up are the same for the “LB”, “R”, “CCR” and “CBR” handle options

‘LA’ lever fine adjustment

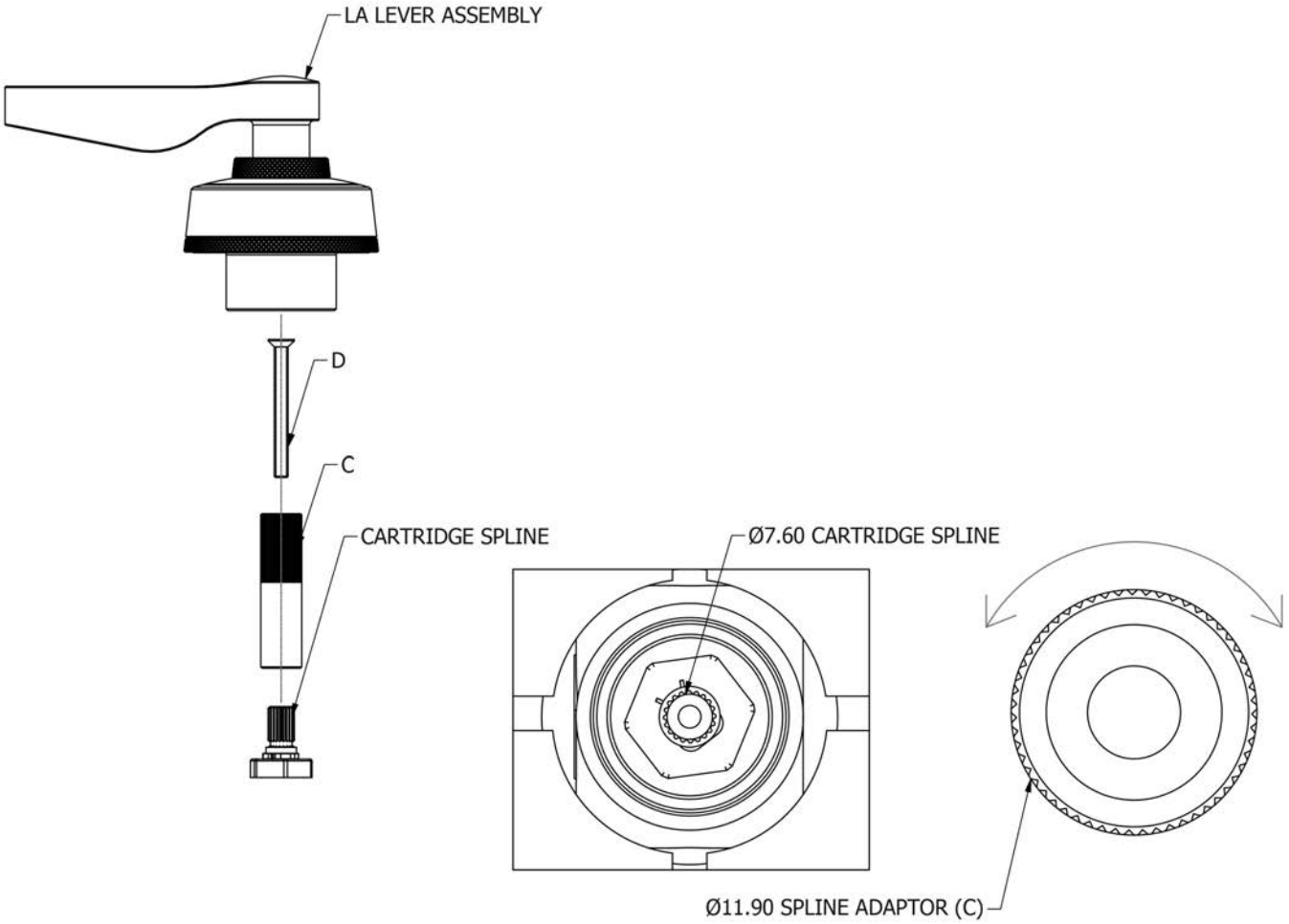

1. Remove screw (D) and spline adaptor (C), turning clockwise or anti-clockwise for fine adjustment.

2. Each rotation on the Ø11.90 spline teeth will alter the angle achievable when ‘LA’ lever assembly comes back into contact with the Ø7.60 spline.

3. Continue rotating spline adaptor (C) one tooth at a time until the optimum alignment is achieved.

IMPORTANT NOTES

1. Installation should be carried out by a competent engineer in accordance with water regulations.
2. Before installation ensure supply pipes are flushed clean as debris or loose particles will affect the effiency of the ceramic disc cartridge.
3. For mixer taps it is recommended that hot & cold pressures are equally balanced.
4. To help maintain the high quality finish please clean with a soft damp cloth. Do not use abrasive polish or cleaners. Stains may be removed using diluted washing up liquid.
5. Ceramic cartridges in hard water areas. To prolong the lifespan and reduce servicing periods of your Samuel Heath tap we recommend that a suitable water softener be fitted. Consult your installer/designer for details.
6. Please note that as with all tap and shower ware it will be necessary from time to time for the products to be serviced, this should be carried out by a qualified Plumbing Engineer.

NOTES IMPORTANTES

1. L'installation doit être faite par un ingénieur qualifié, selon les réglements du Service Eau.
2. Avant l'installation, il faut s'assurer que les tuyaux d'approvisionnement sont complètement purgés. Les déchets flottants auront un effet détrimentaire sur l'efficacité de la cartouche céramique.
3. Il est recommandé que les pressions de l'eau chaude et eau froide des mitigeurs et mélangeurs soient maintenues à un niveau égal.
4. Pour conserver la finition de haute qualité, nettoyer avec un chiffon doux et humide. N'employer jamais de la cire et des produits abrasifs. Les tâches peuvent être enlevées à l'aide de liquide vaisselle pur.
5. Cartouches en céramique dans les régions à eau calcaire. Pour prolonger la durée et réduire l'entretien de votre robinetterie Samuel Heath, nous recommandons d'utiliser un adoucisseur d'eau convenable. Veuillez consulter votre installateur/fournisseur pour plus de renseignements.
6. Veuillez noter qu'un entretien sera nécessaire de temps en temps et doit être effectué par un installateur qualifié.

WICHTIGE HINWEISE

1. Installation sollte durch einen kompetenten Fachmann und nach den üblichen Vorschriften ausgeführt werden.
2. Vor Installation Wasserleitung gründlich durchspülen. Verschmutzung wird die Funktion der Kartusche erheblich einschränken.
3. Für Mischbatterien ist es wichtig, daß Wasser mit gleichem Druck eingefuhrt wird.
4. Um den optimalen Zustand dieses Produktes zu erhalten, wischen Sie es bitte nur mit einem feuchten, weichen Lappen ab. Auf keinen Fall Scheuermittel verwenden. Flecken lassen sich mit unverdünntem Geschirrspülmittel entfernen.
5. Keramikkartuschen in Hartwasserbereichen. Um die Lebensdauer zu verlängern und Wartungszeiten zu reduzieren empfiehlt Samuel Heath den Einsatz eines geeigneten Wasserenthärters. Fragen Sie Ihren Installateur/Designer um Rat.
6. Bitte merken Sie, dass alle Armaturen ab und zu eine Wartung brauchen. Diese soll durch einen kompetenten Installateur ausgeführt werden.

ATENCION

1. La instalación se debe realizar por un fontanero.
2. Antes de la instalación, deben pulgar las tuberias dejándo correr el agua por las tuberias para que arrastren los residuos de montaje/obra, con el motivo de que no afecte la eficacia del cartucho de ceramica.
3. Para grupo baño/ducha se recomienda que las presiones del agua caliente y frio sean equilibradas.
4. Para ayudar a mantener el acabado de este producto, limpiar con un paño húmedo suave. No se debe emplear productos abrasivos de baño. Las manchas se pueden quitar empleándo liquido lava-vajillas puro.
5. Cartuchos cerámicos en áreas de aguas duras . Para prolongar su vida útil y reducir los periodos de reparación de su grifo SamuelHeath recomendamos la instalación de un descalcificador de agua. Consulte a su instalador para más detalles.
6. Igual que con todo tipo de griferia y duchas, de vez en cuando será necesario llevar a cabo una revisión al producto; esto deberia ser realizado por un fontanero calificado.

ATTENZIONE

1. L'impianto deve essere montato da personale tecnico in conformità alle vigenti leggi.
2. Prima dell'installazione assicurarsi che le tubature dell' aqua siano pulite. Detriti o residui di lavorazione compromettono l'efficenza del cartuccio.
3. Per i gruppi, si raccomanda che le pressioni acqua calda e acqua fredda siano ugualmente bilanciate.
4. Per mantenere la finizione di ottima qualità, pulire con un panno soffice e inumidito. Non usare creme lucidanti e materiali abrasivi. Le macchie potranno essere tolte usando del detersivo per piatti puro.
5. Come con tutti i tipi di rubinetti e docce, di volta in volta è necessario effettuare una revisione al prodotto; questo dovrebbe essere fatto da un idraulico qualificato.

SAMUEL HEATH
Head Office and Customer Service
Leopold Street
Birmingham
England
B12 0UJ

T: +44 (0)121 766 4200

Info@samuel-heath.com
www.samuel-heath.co.uk

US Customer Service
usa@samuel-heath.com
www.samuel-heath.com

8-40601
Issue: C