SAMUEL HEATH

Product Data Sheet

V702-T & V705-T Trim To Suit V135-IS / V135-AIS

- Available Control Options -			
V702-TLF	V702-TLK	V702-TLL	V702-TLX
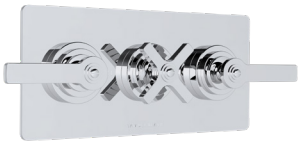 V705-TLF	V705-TLK	V705-TLL	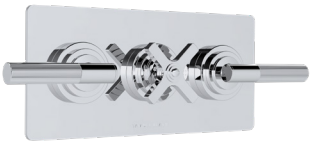 V705-TLX

Dimension Key

V702-TLF

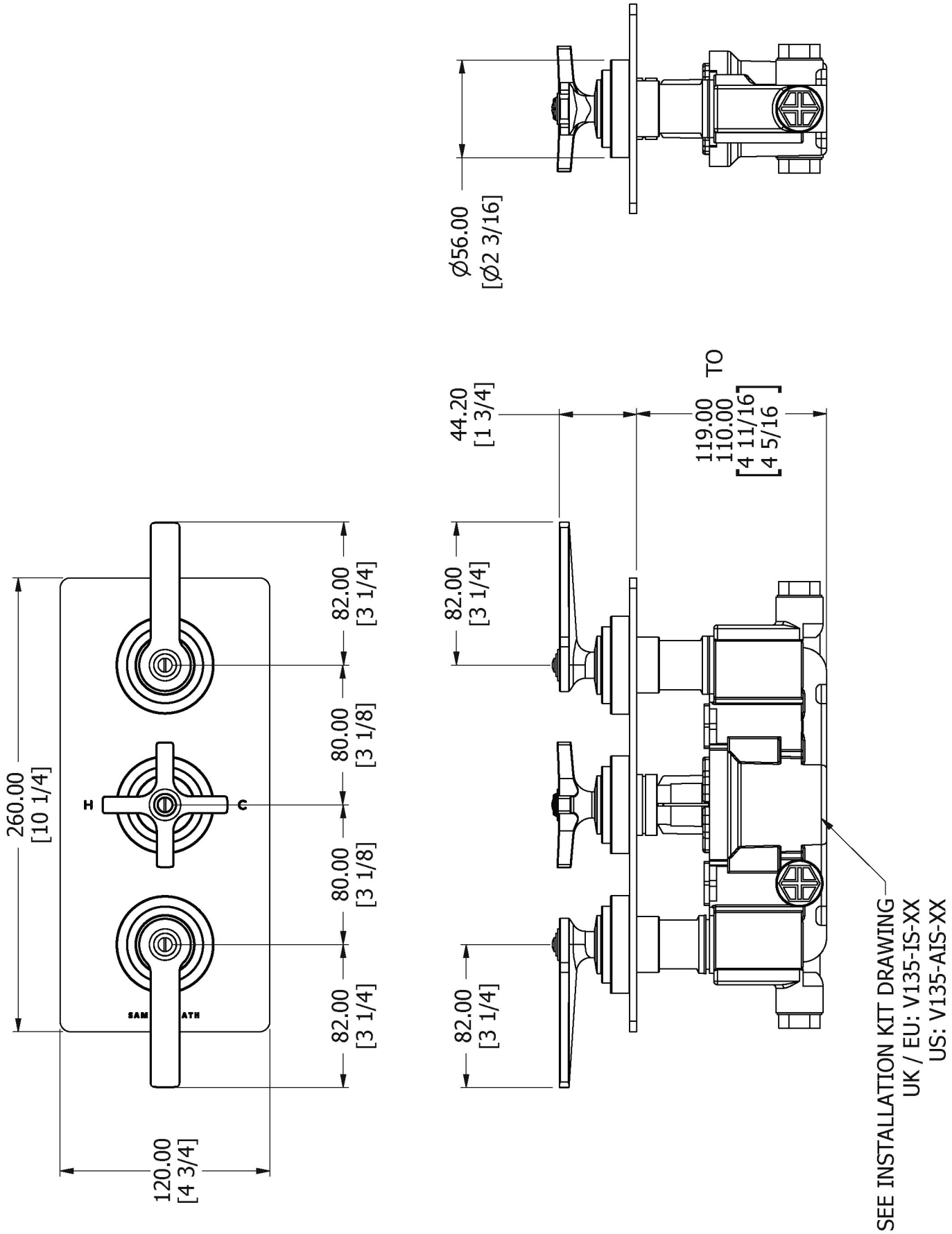

Dimension Key

V702-TLK

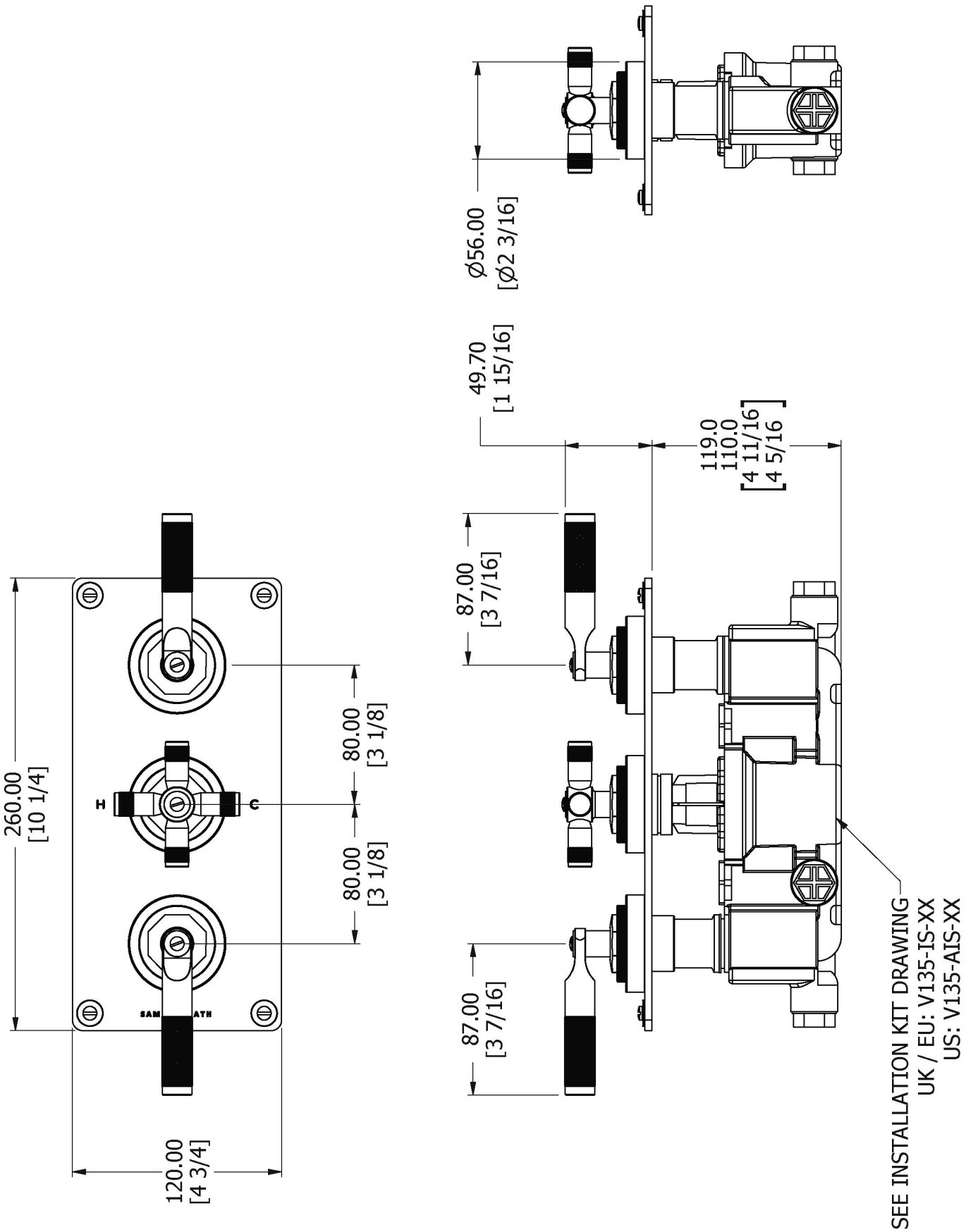

Dimension Key
V702-TLL

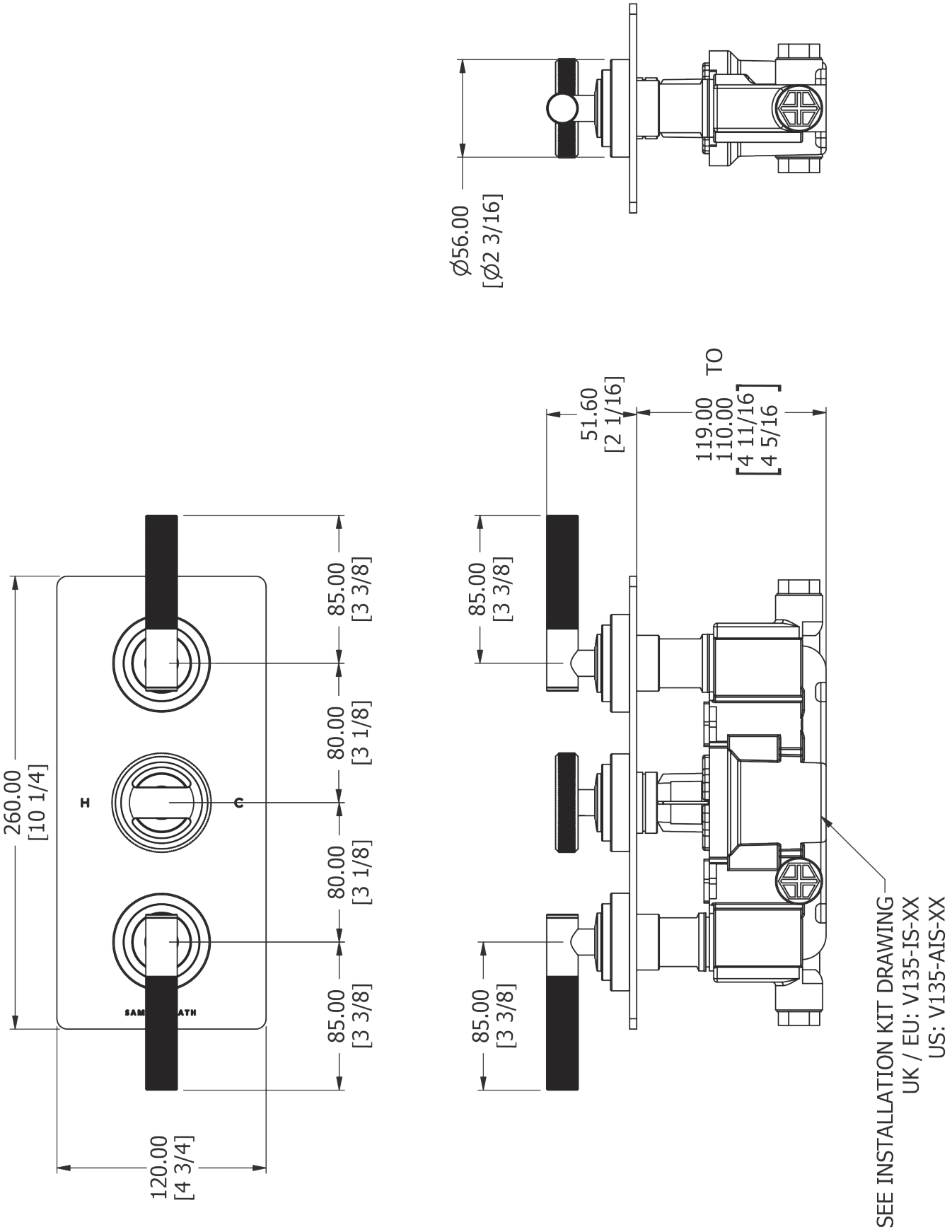

Dimension Key

V702-TLX

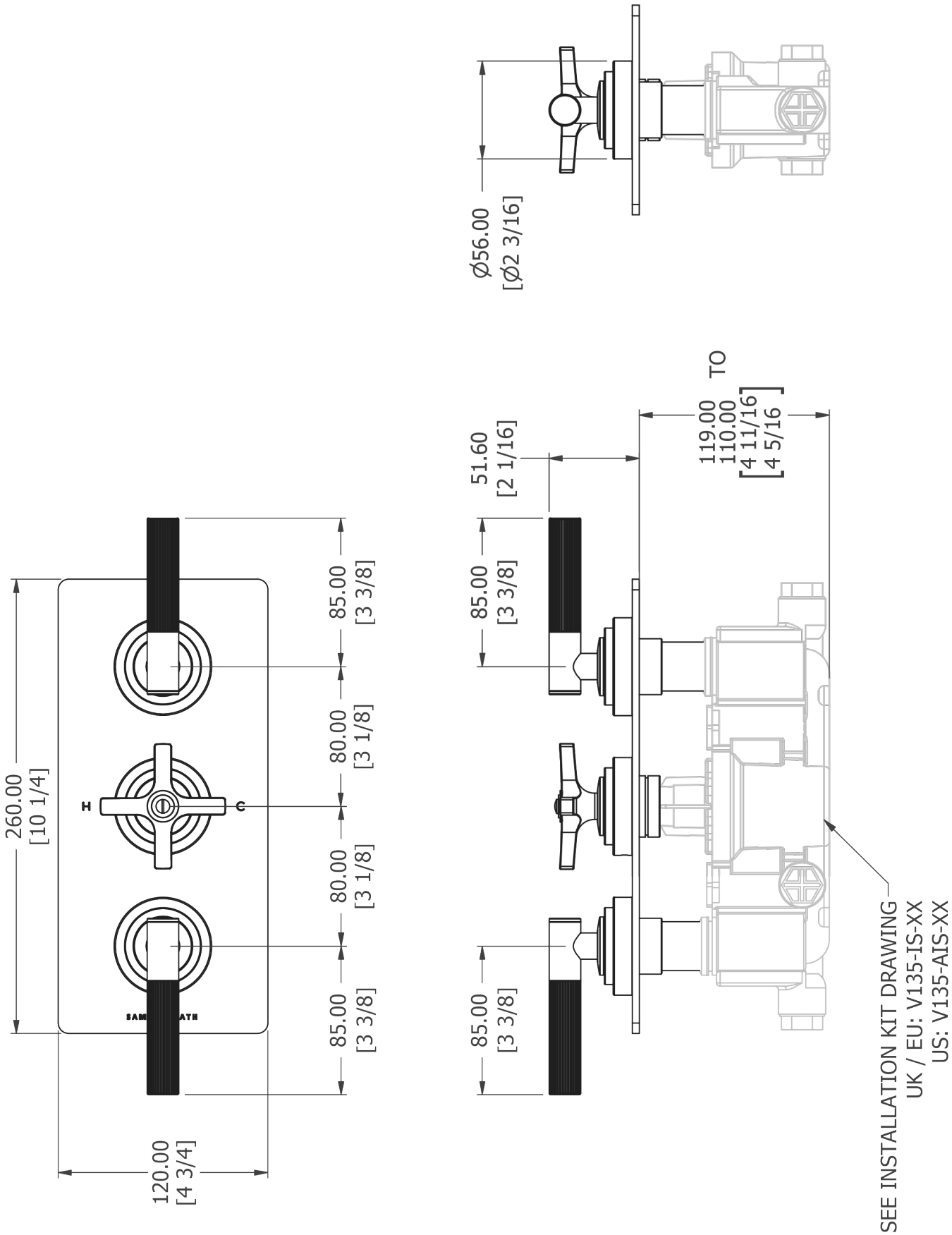

Dimension Key

V705-TLF

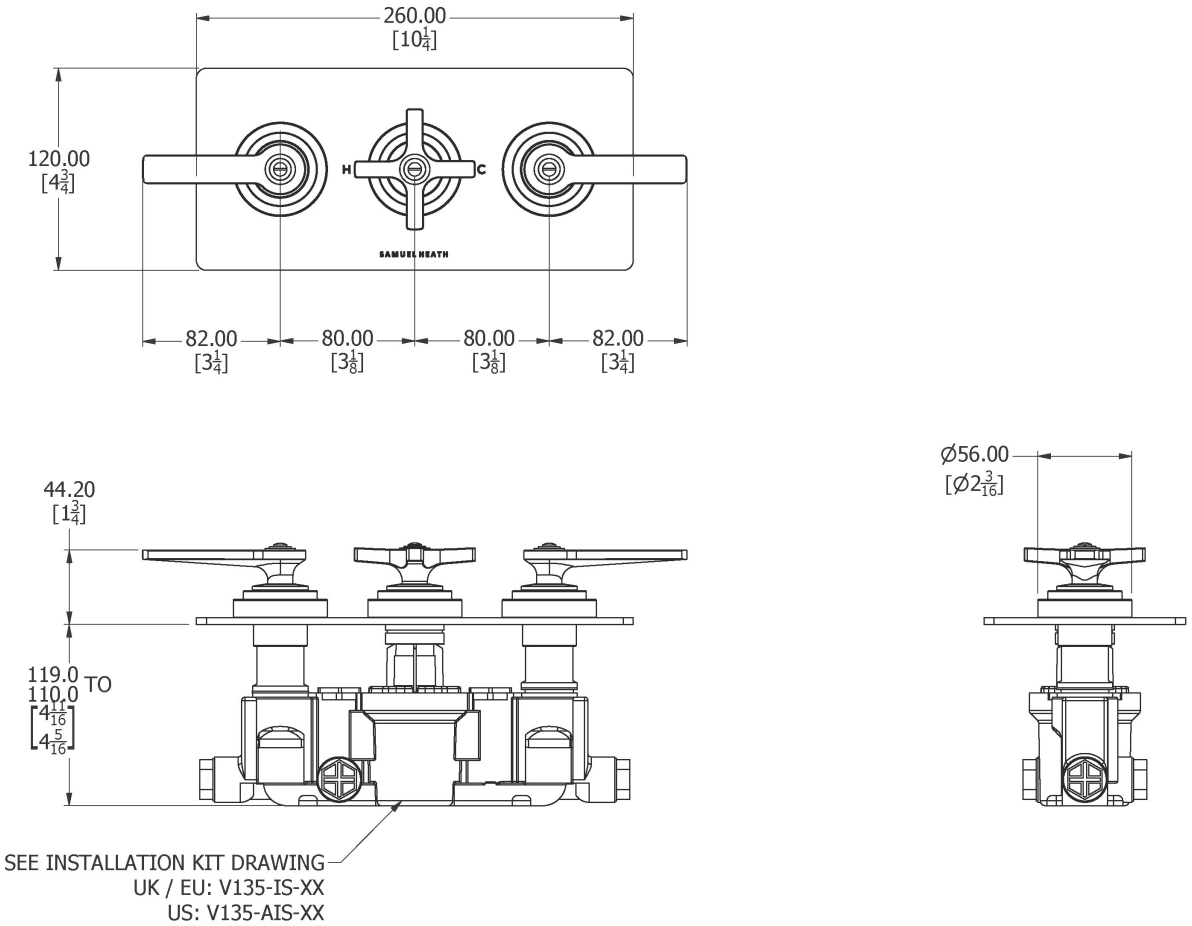

V705-TLK

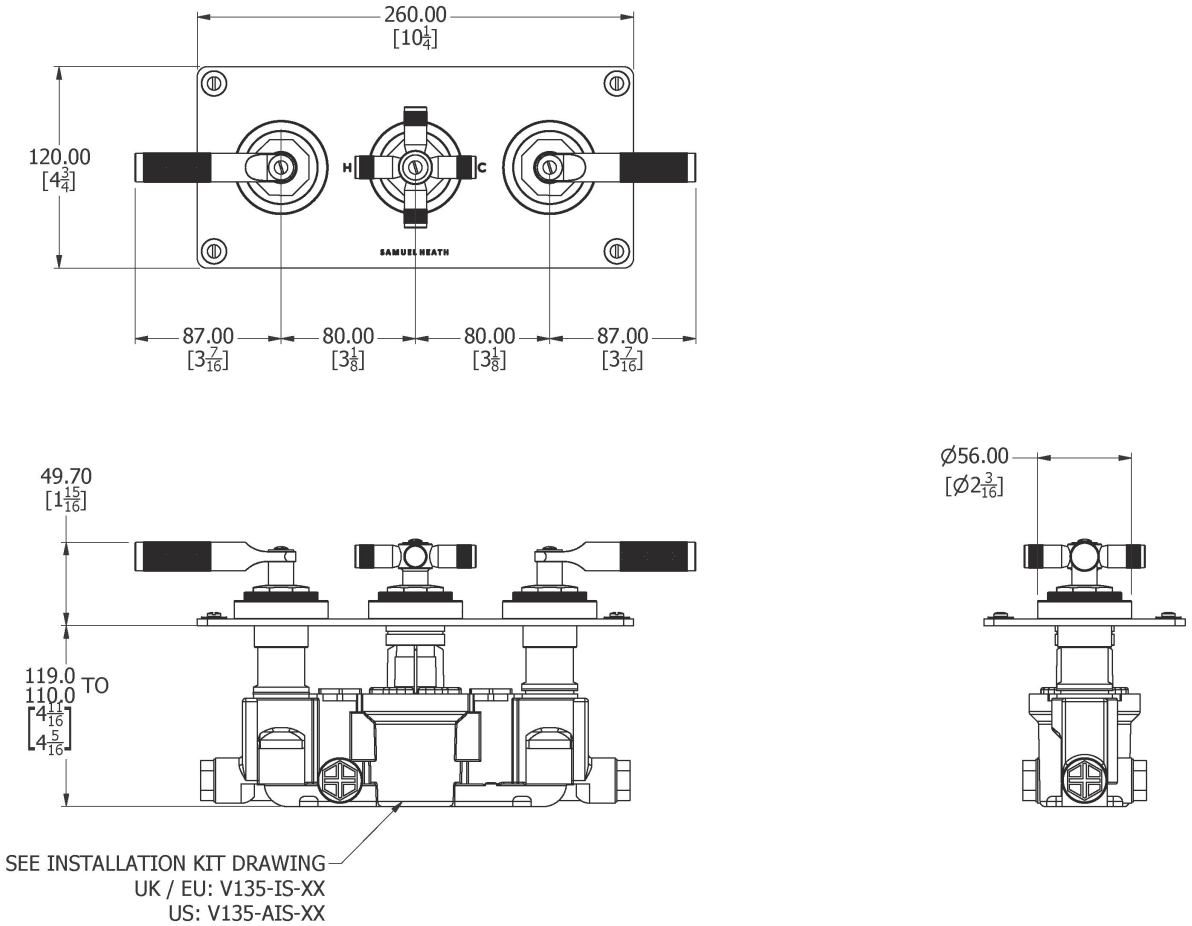

Dimension Key
V705-TLL

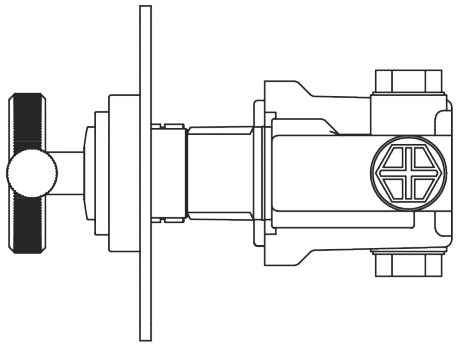

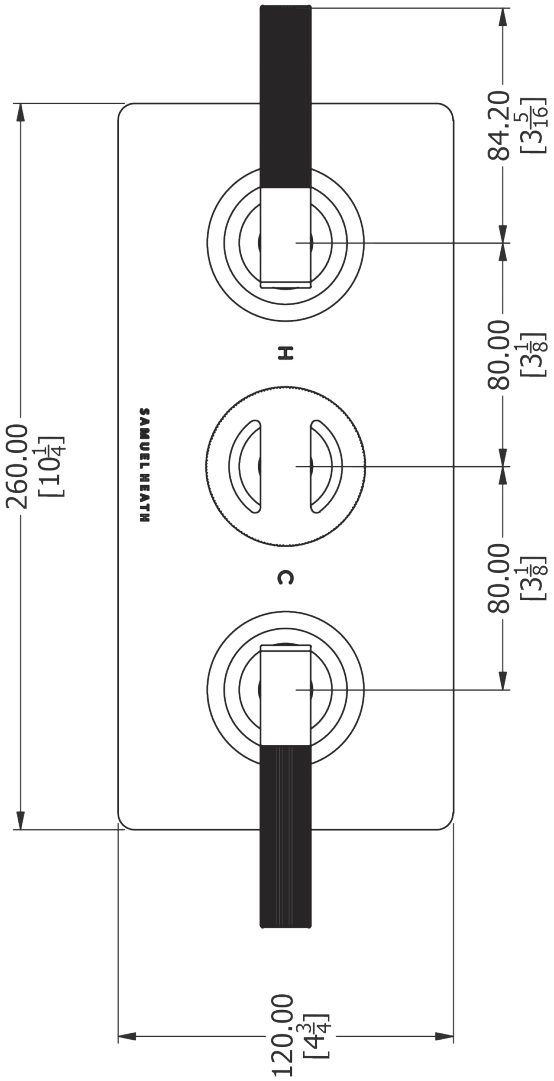

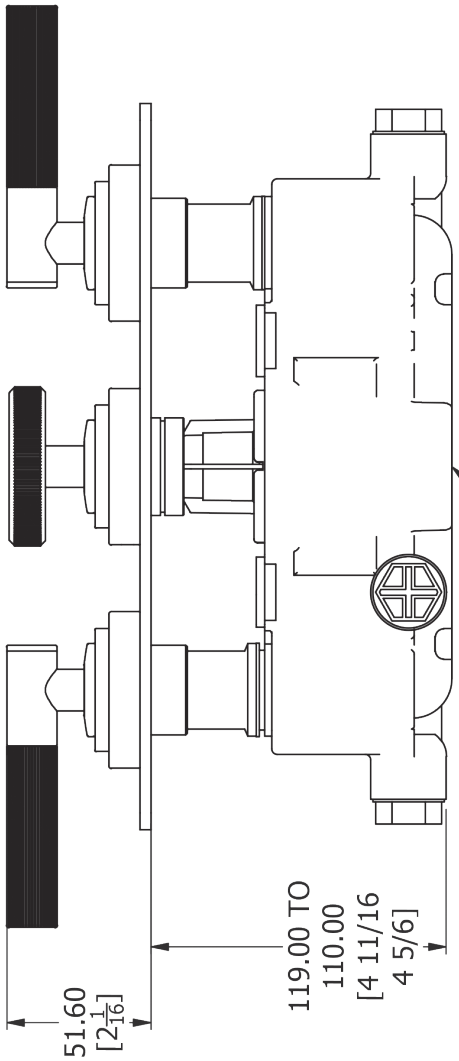

Dimension Key

V705-TLX

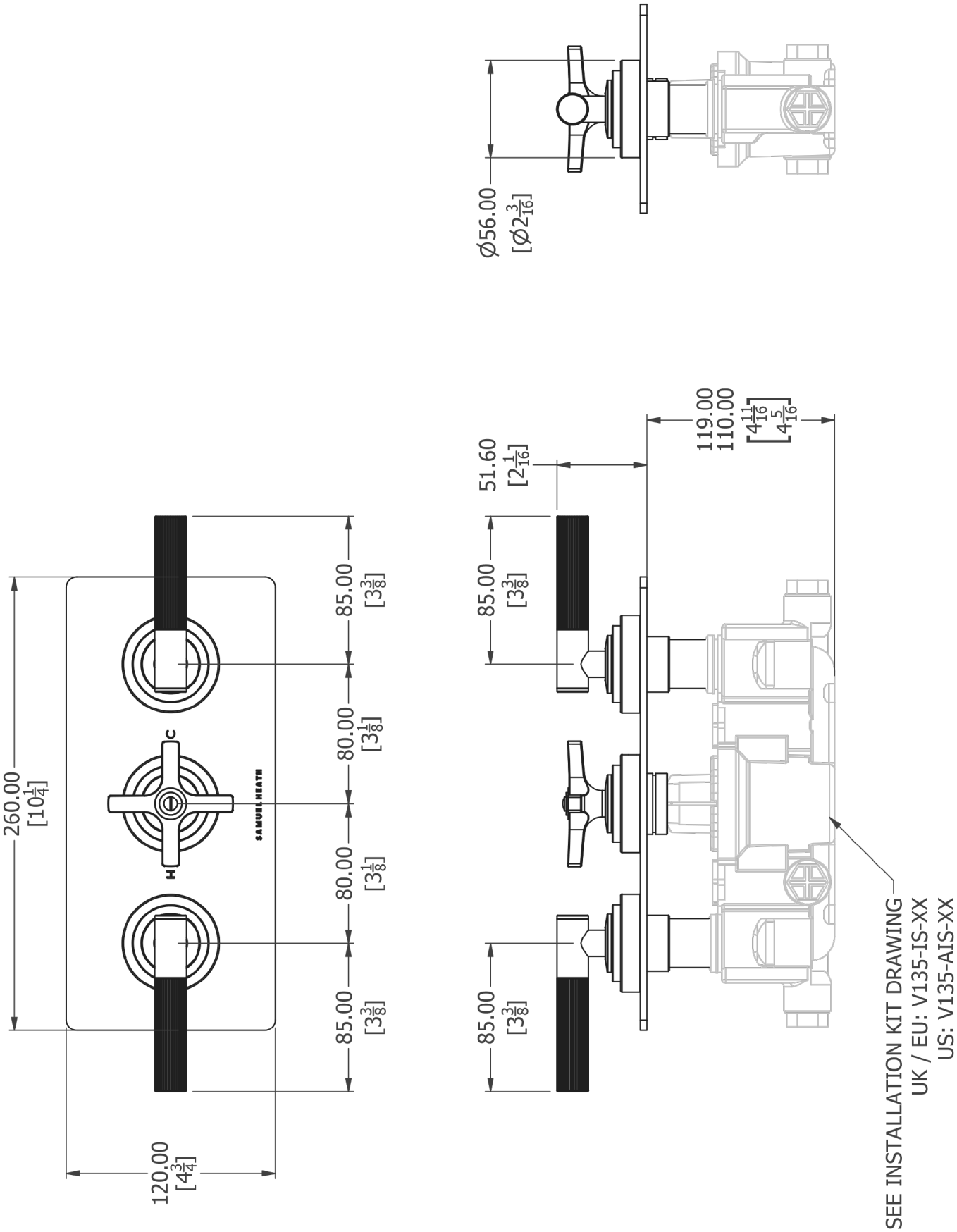

Spares Information

V702-T

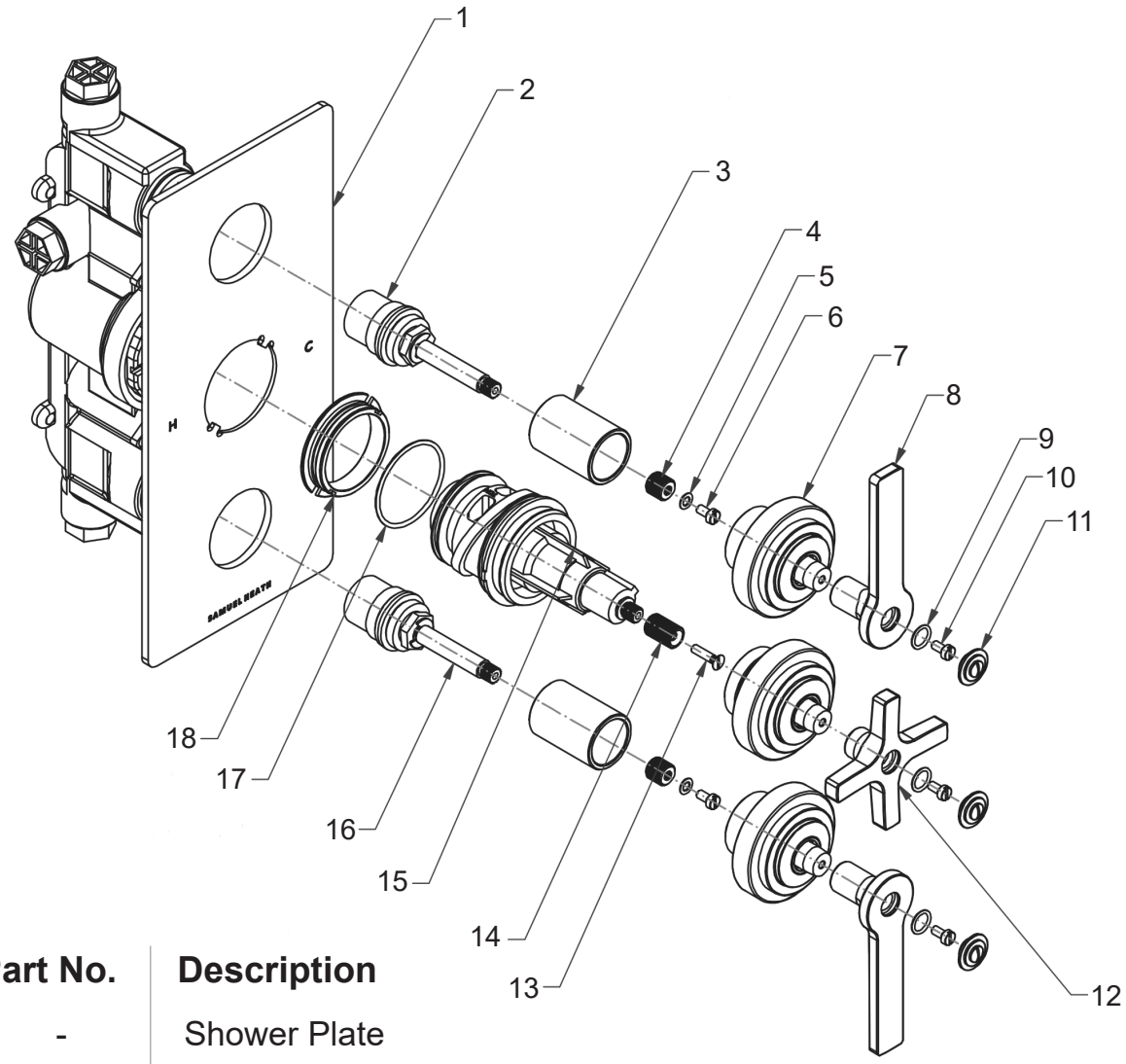

Item	Part No.	Description
1	-	Shower Plate
2	VS56046	CD Valve (Anti-Clockwise Closing)
3	-	Threaded Shank
4	-	Spline Adapter
5	-	Serrated Washer
6	-	Screw M4x8
7	-	Volume Escutcheon
8	-	Lever
9	-	O-Ring
10	-	Screw M4x8
11	-	Indice
12	-	Cross Top
13	-	Screw M4x16
14	-	Spline Adapter
15	VS56065	Thermo Valve
16	VS56047	CD Valve (Clockwise Closing)
17	-	O-Ring
18	-	Thermo Locking Ring

Spares Information

V705-T

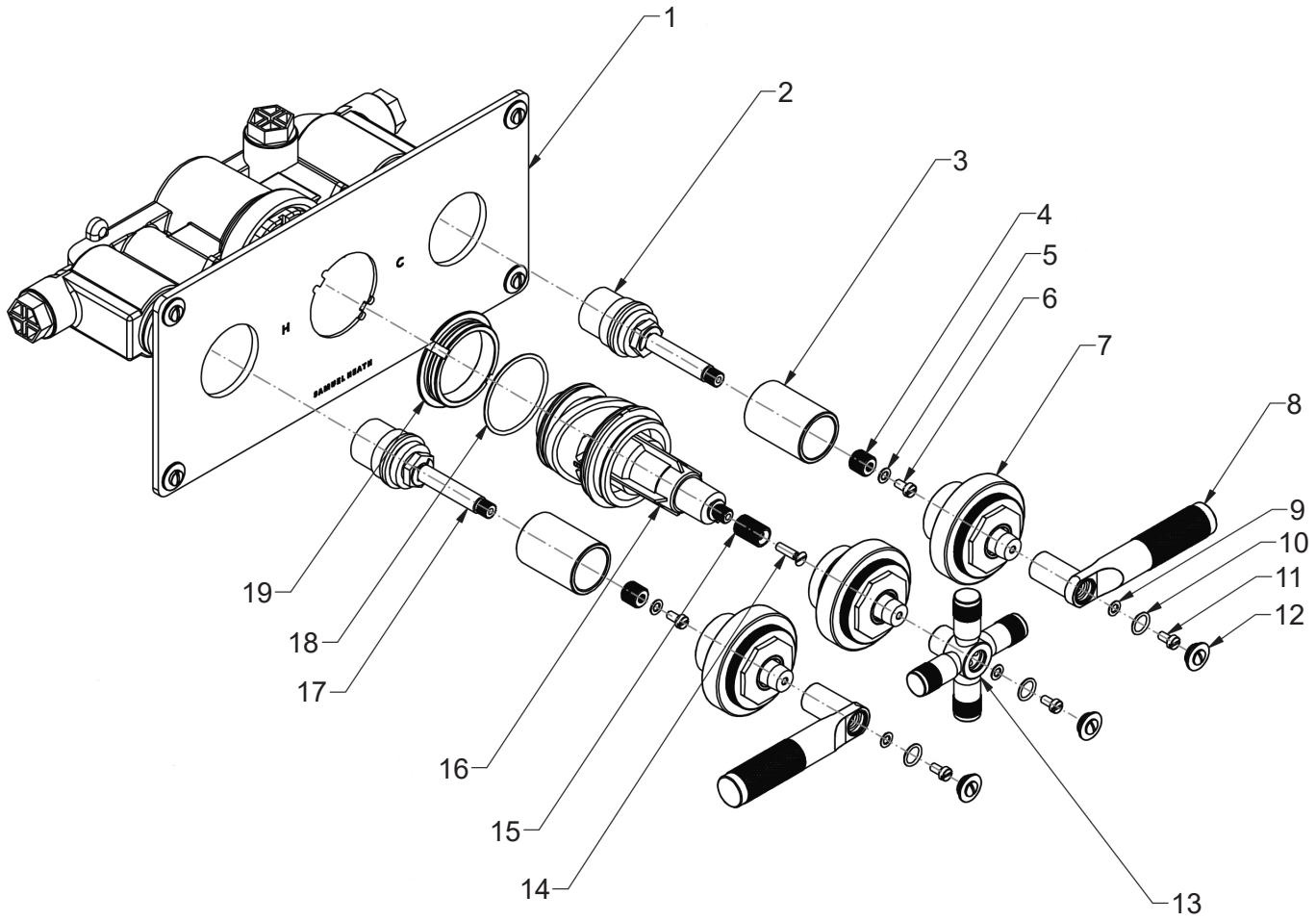

Item	Part No.	Description	Item	Part No.	Description
1	-	Shower Plate	11	-	Screw M4x8
2	VS56046	CD Valve (Anti-Clockwise Closing)	12	-	Indice
			13	-	Cross Top
3	-	Threaded Shank	14	-	Screw M4x16
4	-	Spline Adapter	15	-	Spline Adapter
5	-	Serrated Washer	16	VS56065	Thermo Valve
6	-	Screw M4x8	17	VS56047	CD Valve (Clockwise Closing)
7	-	Volume Escutcheon			
8	-	Lever	18	-	O-Ring
9	-	Serrated Washer	19	-	Thermo Locking Ring
10	-	O-Ring			

Installation

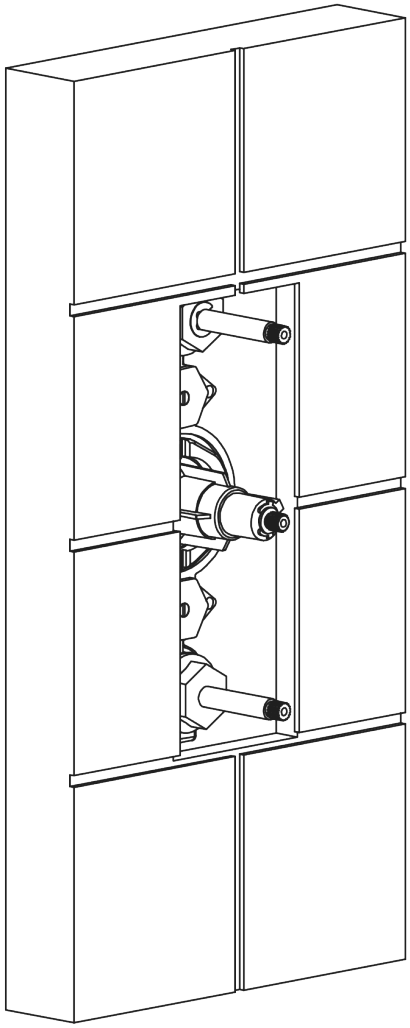

1. Install the finished surface, ensuring the finished surface is in accordance with the minimum and maximum installation depths shown on the drawings in the front of this booklet.

Set Up

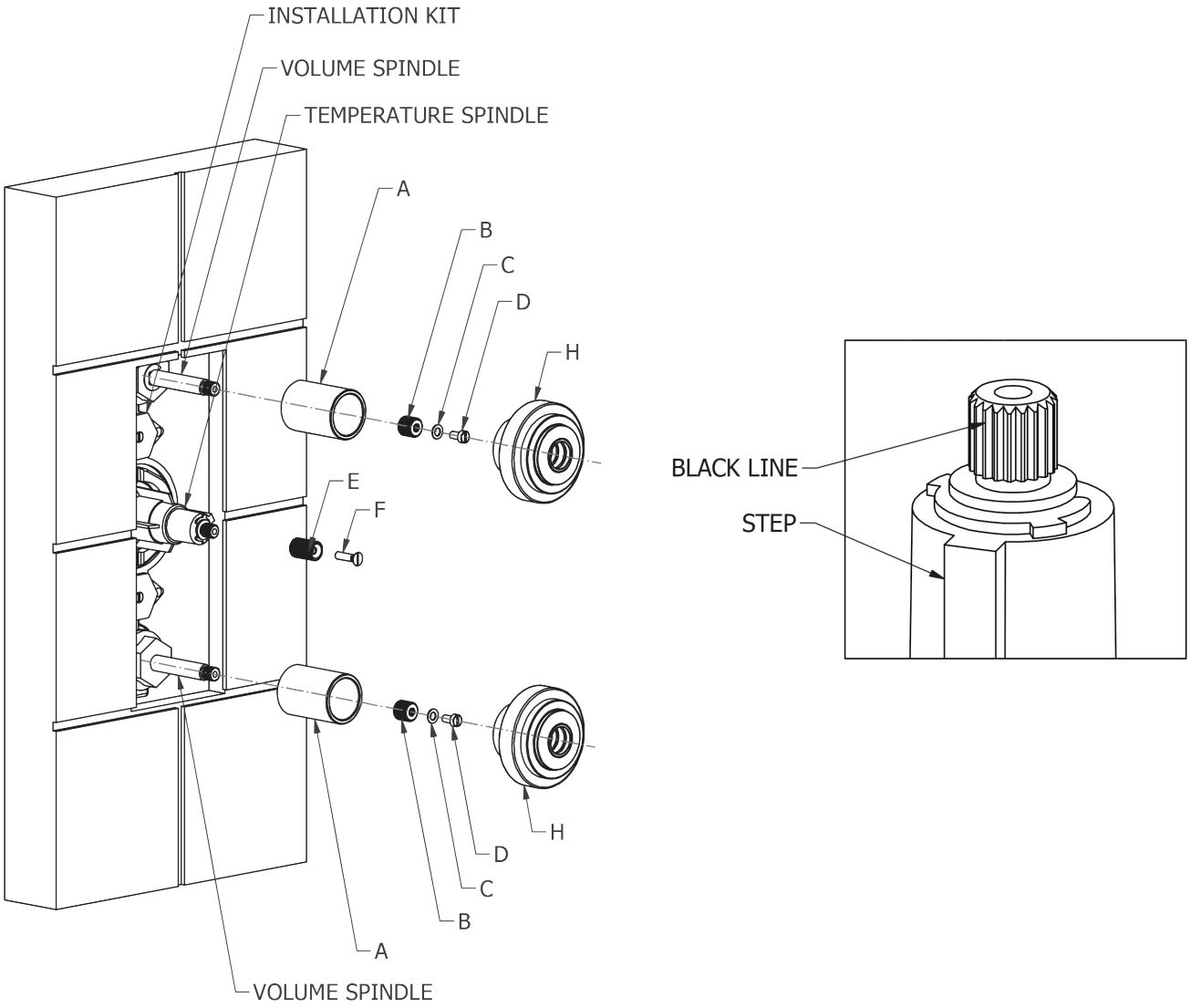

2. Ensure that the black line on the temperature spindle is in line with the step on the cartridge.

3. Unscrew the volume threaded shank (A) from volume body (H) and screw onto the installation kit.

4. Push the short spline adapter (B) onto the volume spindle and secure using locking washer (C) and screw (D).

5. Push the long spline adapter (E) onto the temperature spindle and secure with countersink screw (F) ensuring that the spindle does not rotate when tightening.

Set Up

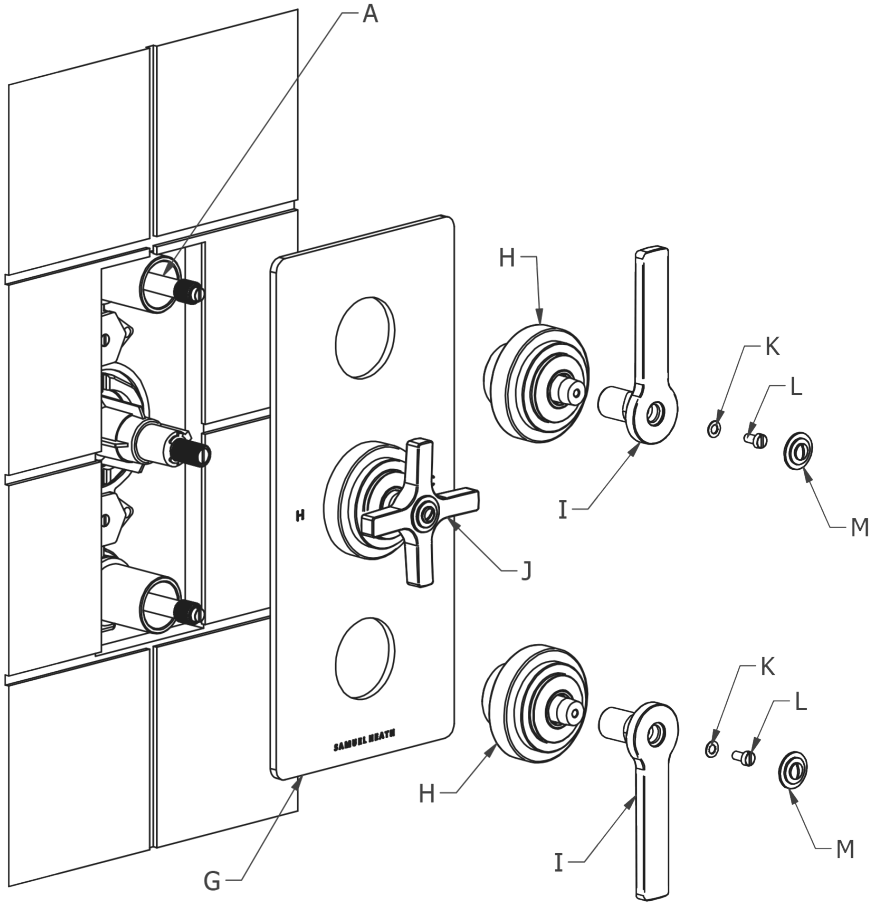

6. Apply a bead of silicon sealant to the wall where the trim plate assembly (G) will sit.

7. Turn the temperature cross top anti-clockwise as far as it will go without pressing it in to activate the temperature override.

8. Push trim plate assembly (G) onto the installed shower.

9. Clamp the trim plate assembly (G) in place by screwing the volume bodies (H) onto the volume threaded shanks (A).

10. Assemble the levers (I) and cross tops (J) using locking washers (K), screws (L) and indices (M).

Control Assembly Instructions - LF, LK, XF & XK

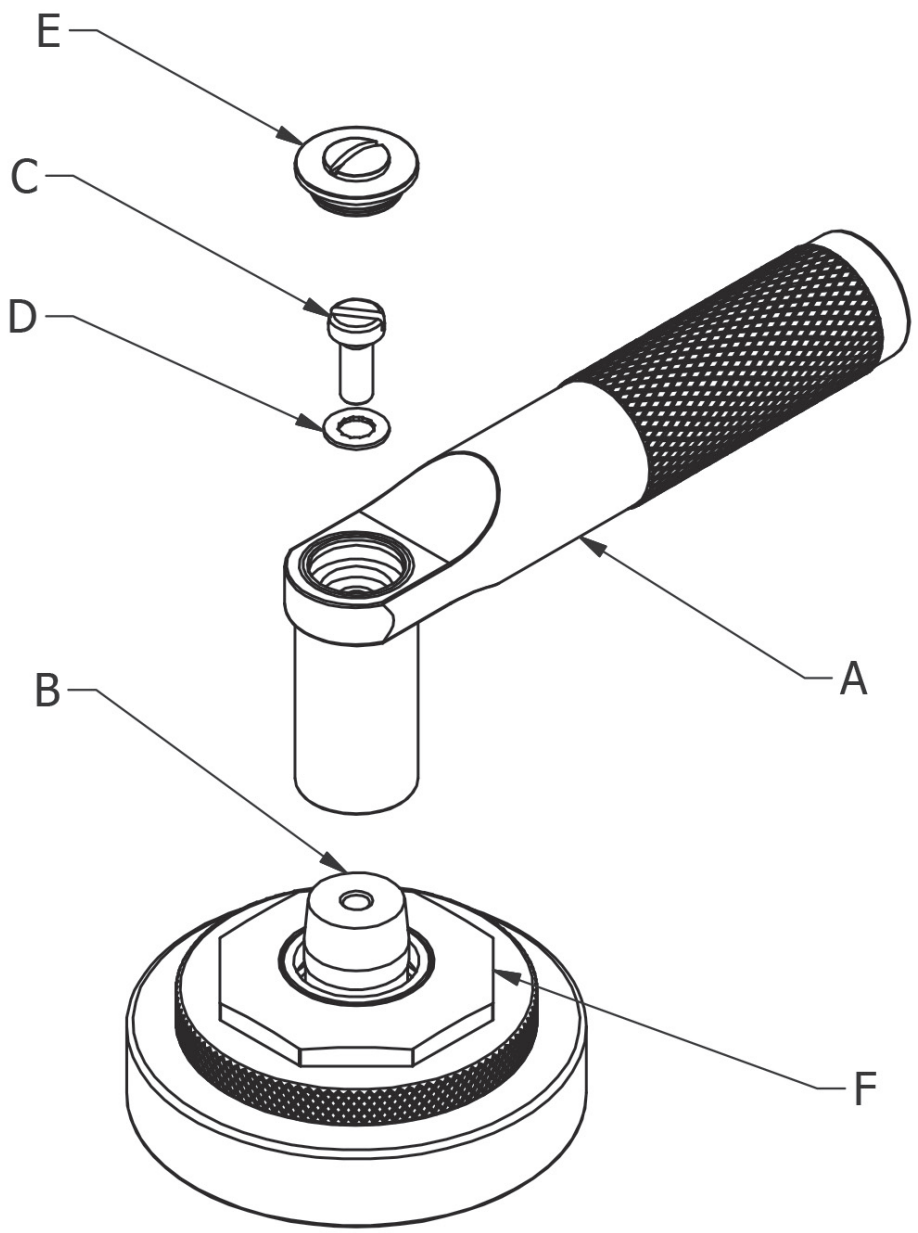

1. Screw handle (A) onto spindle (B) using screw (C) and washer (D).

2. Push indice (E) into the handle option (A) to conceal the fixing.

3. The octagonal nut (F) can be rotated to the desired angle.

Note: The taper on the spindle (B) will lock in to the female taper in the handle option (A).

To remove the handle option (A) remove the screw (C) and washer (D). The handle option (A) has an M5 thread through its central fixing hole, by screwing an M5 screw in to this it will push the handle option (A) and the spindle (B) apart.

Control Assembly Instructions - LL & LX

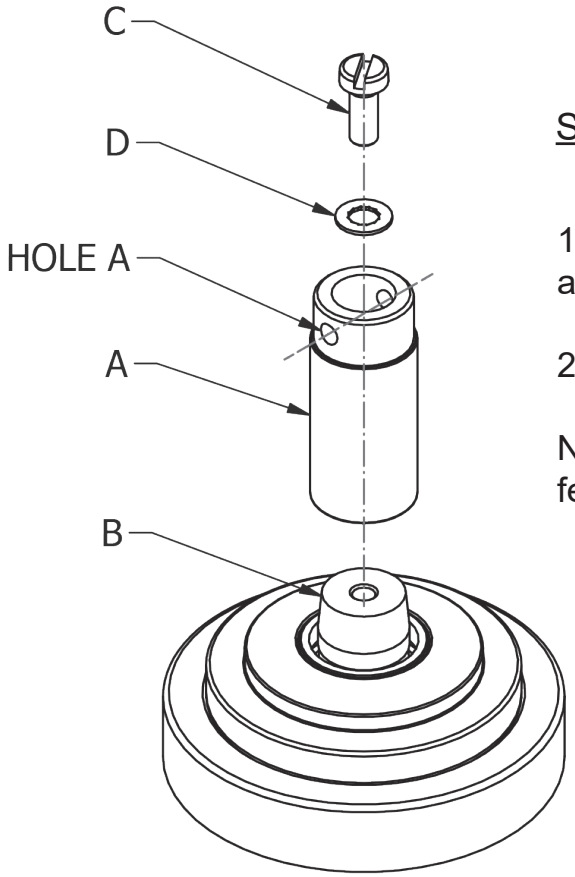

STEP 1

1. Secure stem (A) onto spindle (B) using screw (C) and washer (D)

2. Make note of the position of [HOLE A] for **STEP 2**

NOTE**:** The taper on the spindle (B) will lock into the female taper in the stem (A)

STEP 2

1. Push lever assembly (E) onto stem (A), ensuring [HOLE A] & [HOLE B] are in alignment

2. Secure lever assembly (E) using screw (F) and washer (D)

3. Push indice (G) into the lever assembly (E) as shown, to conceal the fixing

To remove the lever assembly (E), remove indice (G), screw (F) and washer (D). Lever assembly will then lift off, exposing the stem (A).

To remove the stem (A), remove screw (C) and washer (D). There is then an M5 thread through the central fixing hole on the stem (A). By screwing an M5 screw into this, it will push the stem (A) and the spindle (B) apart.

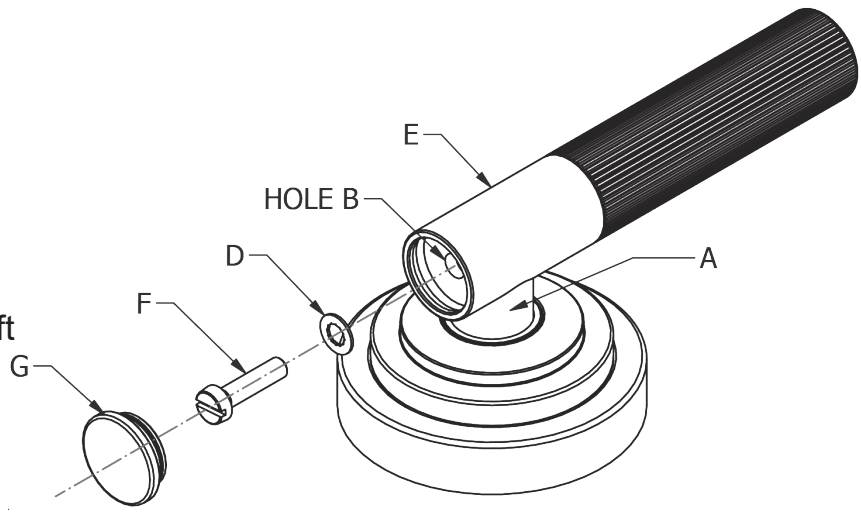

Control Assembly Instructions - LW

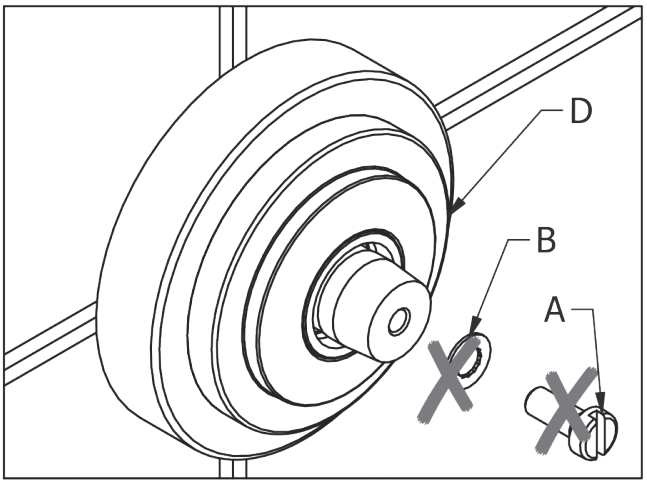

1. For installation of the hand wheel, M4 screw (A) and large anti-rotational washer (B) provided with the product can be discarded as they are not required for this control option.

2. Remove side valve assembly (D) from the wall, if installed.

3. Push hand wheel (C) through the centre of side valve assembly (D), then use the M3 screw (F) and small anti-rotational washer (E) to secure it in place, as shown.

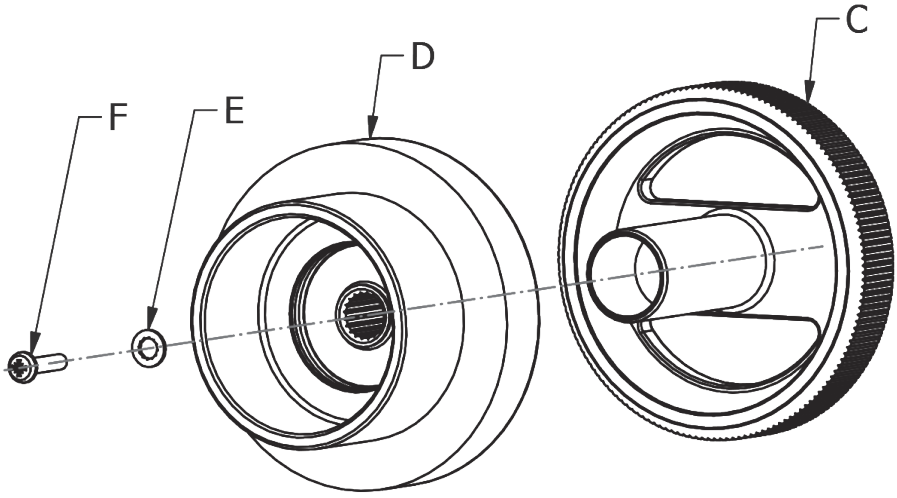

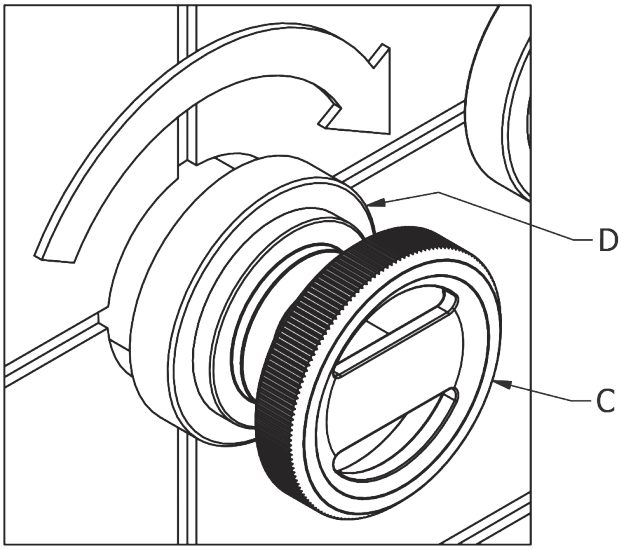

4. Rotate hand wheel (C) to desired angle for operation.

5. Screw side valve assembly (D) into the installation kit, ensuring that hand wheel (C) is held in position to retain desired angle of operation.

6. If required, apply a suitable silicon sealant to the wall where the side valve assembly (D) will sit.

Temperature Override Mechanism

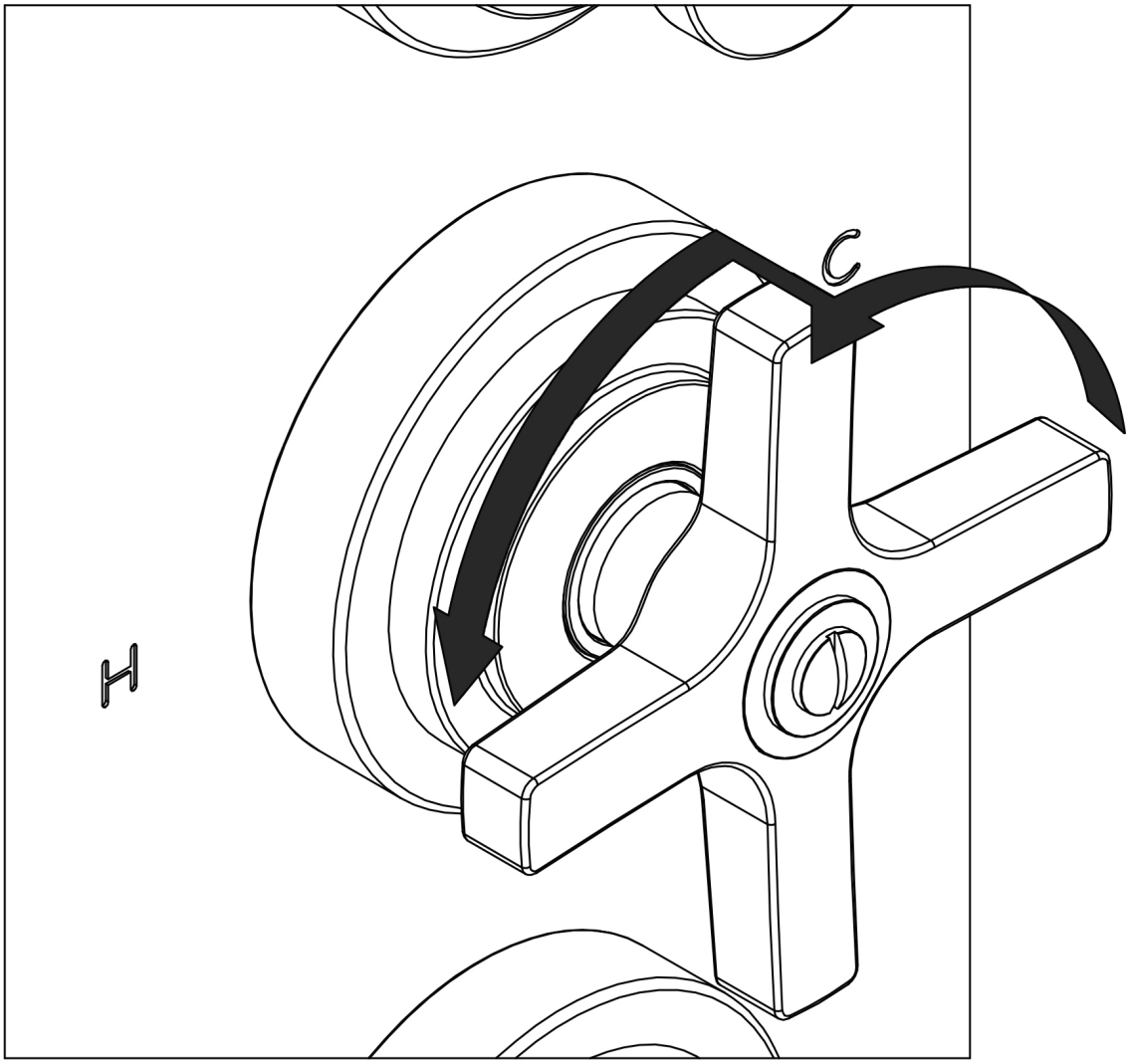

- This product has a pre-set maximum temperature of 41°C - 43°C (106°F - 109°F)

- An additional temperature increase is available by pressing in the sprung loaded cross top as shown at the maximum setting.

- The unit automatically clicks back into pre-override when rotated back towards cold.

- For further temperature increases, please see “Adjusting The Temperature”

Adjusting The Temperature

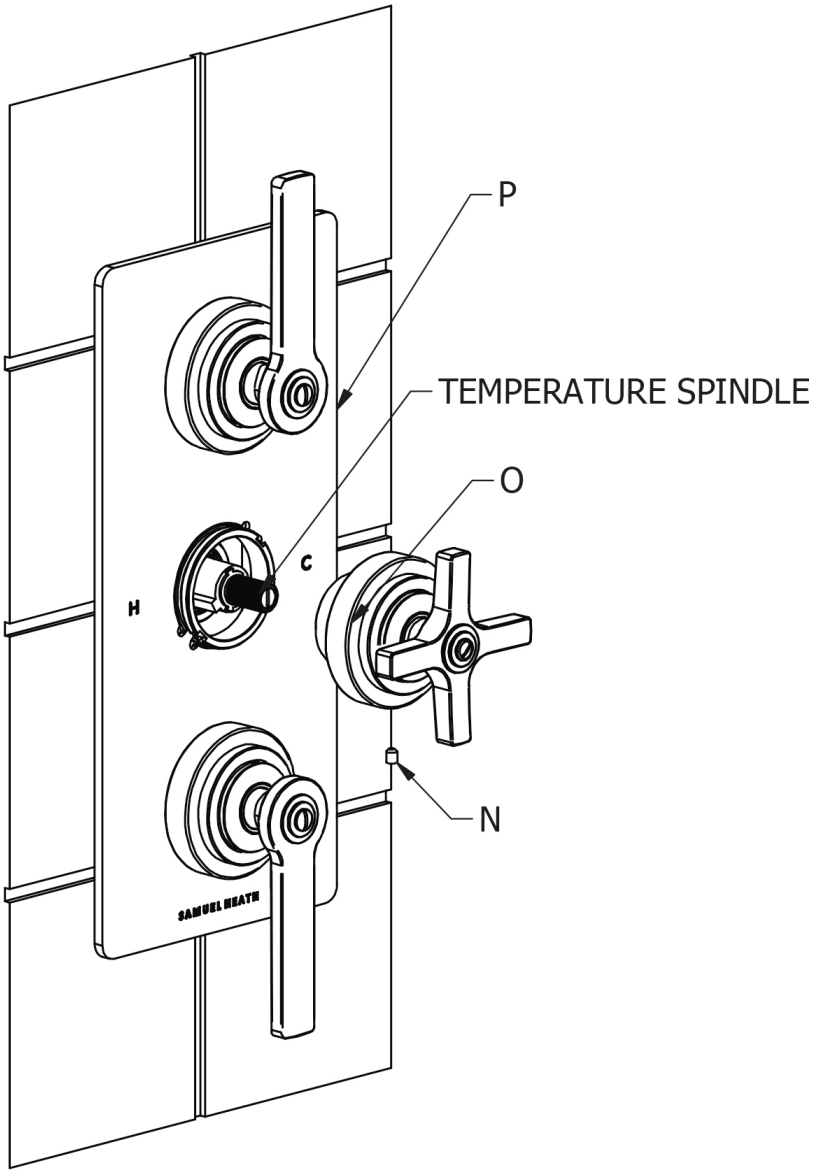

1. Remove grub screw (N) from the temperature escutcheon (O).

2. Pull the temperature escutcheon (O) away from the shower plate (P).

3. Rotate the temperature spindle anti-clockwise to make the water hotter, or clockwise to make the water colder.

4. Re-assemble the escutcheon (O).

IMPORTANT NOTES

1. Installation should be carried out by a competent engineer, in accordance with water regulations.
2. Before installation, ensure supply pipes are flushed clean. Debris or loose particles will affect the efficiency of the ceramic disc cartridge.
3. For mixer taps, it is recommended that hot & cold pressures are equally balanced.
4. To help maintain the high quality finish, please clean with a soft damp cloth. Do not use abrasive polish or cleaners. Stains may be removed using undiluted washing up liquid.
5. Ceramic cartridges in hard water areas. To prolong the lifespan and reduce servicing periods of your Samuel Heath tap we recommend that a suitable water softener be fitted. Consult your installer/designer for details.
6. Please note that as with all tap and shower ware it will be necessary from time to time for the products to be serviced, this should be carried out by a qualified Plumbing Engineer.

NOTES IMPORTANTES

1. L'installation doit être faite par un ingénieur qualifié, selon les réglements du Service Eau.
2. Avant l'installation, il faut s'assurer que les tuyaux d'approvisionnement sont complètement purgés. Les déchets flottants auront un effet détrimentaire sur l'efficacité de la cartouche céramique.
3. Il est recommandé que les pressions de l'eau chaude et eau froide des mitigeurs et mélangeurs soient maintenues à un niveau égal.
4. Pour conserver la finition de haute qualité, nettoyer avec un chiffon doux et humide. N'employer jamais de la cire et des produits abrasifs. Les tâches peuvent être enlevées à l'aide de liquide vaisselle pur.
5. Cartouches en céramique dans les régions à eau calcaire. Pour prolonger la durée et réduire l'entretien de votre robinetterie Samuel Heath, nous recommandons d'utiliser un adoucisseur d'eau convenable. Veuillez consulter votre installateur/fournisseur pour plus de renseignements.
6. Veuillez noter qu'un entretien sera nécessaire de temps en temps et doit être effectué par un installateur qualifié.

WICHTIGE HINWEISE

1. Installation sollte durch einen kompetenten Fachmann und nach den üblichen Vorschriften ausgeführt werden.
2. Vor Installation Wasserleitung gründlich durchspülen. Verschmutzung wird die Funktion der Kartusche erheblich einschränken.
3. Für Mischbatterien ist es wichtig, daß Wasser mit gleichem Druck eingefuhrt wird.
4. Um den optimalen Zustand dieses Produktes zu erhalten, wischen Sie es bitte nur mit einem feuchten, weichen Lappen ab. Auf keinen Fall Scheuermittel verwenden. Flecken lassen sich mit unverdünntem Geschirrspülmittel entfernen.
5. Keramikkartuschen in Hartwasserbereichen. Um die Lebensdauer zu verlängern und Wartungszeiten zu reduzieren empfiehlt Samuel Heath den Einsatz eines geeigneten Wasserenthärters. Fragen Sie Ihren Installateur/Designer um Rat.
6. Bitte merken Sie, dass alle Armaturen ab und zu eine Wartung brauchen. Diese soll durch einen kompetenten Installateur ausgeführt werden.

ATENCION

1. La instalación se debe realizar por un fontanero.
2. Antes de la instalación, deben pulgar las tuberias dejándo correr el agua por las tuberias para que arrastren los residuos de montaje/obra, con el motivo de que no afecte la eficacia del cartucho de ceramica.
3. Para grupo baño/ducha se recomienda que las presiones del agua caliente y frio sean equilibradas.
4. Para ayudar a mantener el acabado de este producto, limpiar con un paño húmedo suave. No se debe emplear productos abrasivos de baño. Las manchas se pueden quitar empleándo liquido lava-vajillas puro.
5. Cartuchos cerámicos en áreas de aguas duras . Para prolongar su vida útil y reducir los periodos de reparación de su grifo SamuelHeath recomendamos la instalación de un descalcificador de agua. Consulte a su instalador para más detalles.
6. Igual que con todo tipo de griferia y duchas, de vez en cuando será necesario llevar a cabo una revisión al producto; esto deberia ser realizado por un fontanero calificado.

ATTENZIONE

1. L'impianto deve essere montato da personale tecnico in conformità alle vigenti leggi.
2. Prima dell'installazione assicurarsi che le tubature dell' aqua siano pulite. Detriti o residui di lavorazione compromettono l'efficenza del cartuccio.
3. Per i gruppi, si raccomanda che le pressioni acqua calda e acqua fredda siano ugualmente bilanciate.
4. Per mantenere la finizione di ottima qualità, pulire con un panno soffice e inumidito.
   Non usare creme lucidanti e materiali abrasivi. Le macchie potranno essere tolte usando del detersivo per piatti puro.
5. Come con tutti i tipi di rubinetti e docce, di volta in volta è necessario effettuare una revisione al prodotto; questo dovrebbe essere fatto da un idraulico qualificato.

SAMUEL HEATH

Head Office and Customer Service
Leopold Street
Birmingham
England
B12 0UJ

T: +44 (0)121 766 4200
F: +44 (0)121 772 3334

Info@samuel-heath.com
www.samuel-heath.co.uk

US Customer Service
usa@samuel-heath.com
Federal I.D. No. 58-1504682
www.samuel-heath.com

8-40483
Issue: F