SAMUEL HEATH

Product Data Sheet

V7K17-1/ V7K17-2/ V7K17-3/ V7K17S-1/ V7K17S-2/ V7K17S-3/ V7KALL17-1/ V7KALL17-2/ V7KALL17-3/ V7KALL17S-1/ V7KALL17S-2/ V7KALL17S-3

3 Hole Basin/ Lavatory Filler, Wall Mounted

Product available in both 28mm & 24mm spout diameters

- Available Options -

V7K17-1LF	**V7K17-1LK**	**V7K17-1XF**	**V7K17-1XK**	**V7K17-1LL**	**V7K17-1LW**
V7K17-2LF	**V7K17-2LK**	**V7K17-2XF**	**V7K17-2XK**	**V7K17-2LL**	**V7K17-2LW**
V7K17-3LF	**V7K17-3LK**	**V7K17-3XF**	**V7K17-3XK**	**V7K17-3LL**	**V7K17-3LW**

Dimension Key

V7K17-LF/ V7KALL17-LF

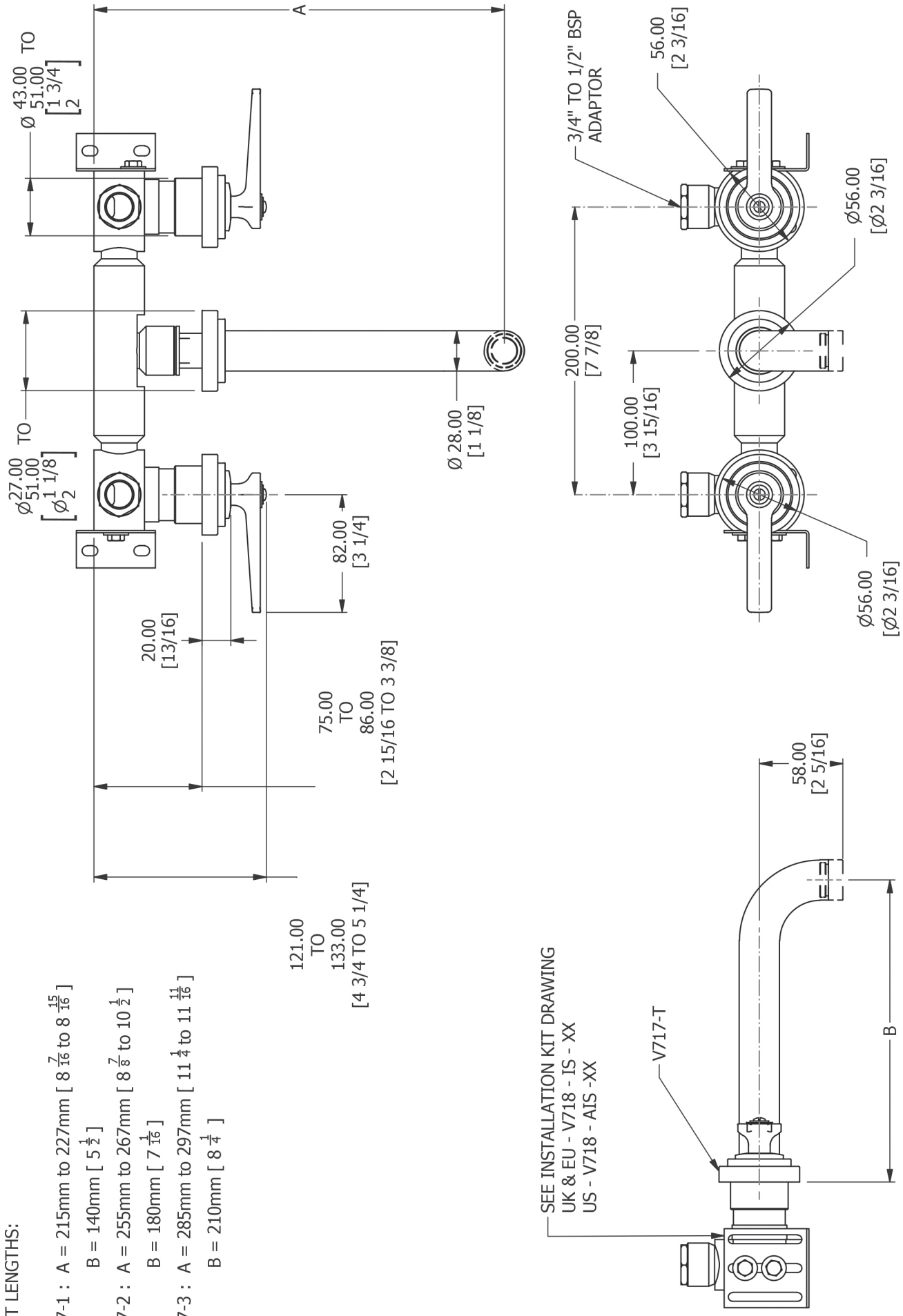

SPOUT LENGTHS:

V7K17-1 : A = 215mm to 227mm [8 $\frac{7}{16}$ to 8 $\frac{15}{16}$]
B = 140mm [5 $\frac{1}{2}$]

V7K17-2 : A = 255mm to 267mm [8 $\frac{7}{8}$ to 10 $\frac{1}{2}$]
B = 180mm [7 $\frac{1}{16}$]

V7K17-3 : A = 285mm to 297mm [11 $\frac{1}{4}$ to 11 $\frac{11}{16}$]
B = 210mm [8 $\frac{1}{4}$]

Dimension Key

V7K17-LK/ V7KALL17-LK

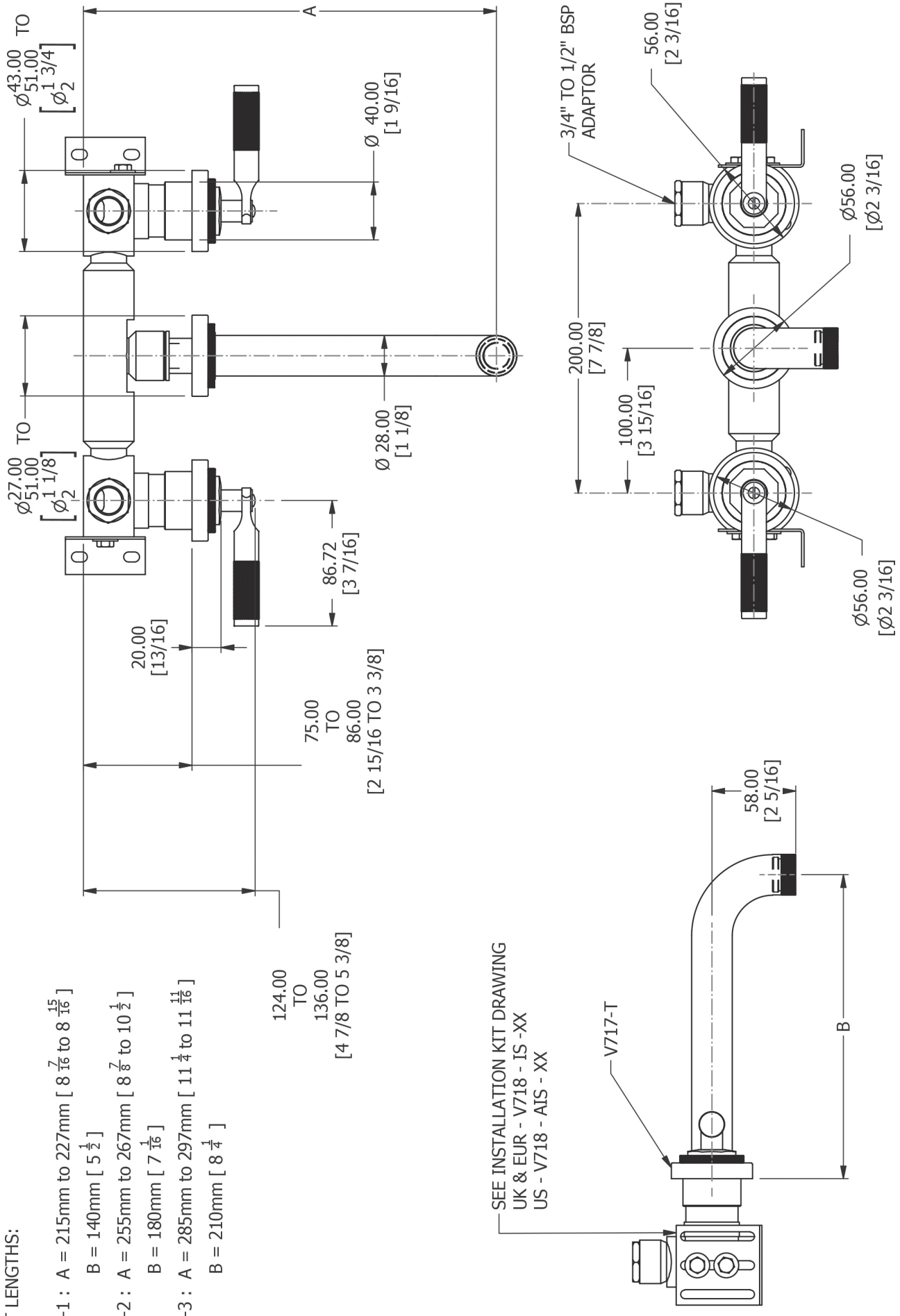

SPOUT LENGTHS:

V7K17-1 : A = 215mm to 227mm [8 $\frac{7}{16}$ to 8 $\frac{15}{16}$]
B = 140mm [5 $\frac{1}{2}$]

V7K17-2 : A = 255mm to 267mm [8 $\frac{7}{8}$ to 10 $\frac{1}{2}$]
B = 180mm [7 $\frac{1}{16}$]

V7K17-3 : A = 285mm to 297mm [11 $\frac{1}{4}$ to 11 $\frac{11}{16}$]
B = 210mm [8 $\frac{1}{4}$]

Dimension Key

V7K17-XF/ V7KALL17-XF

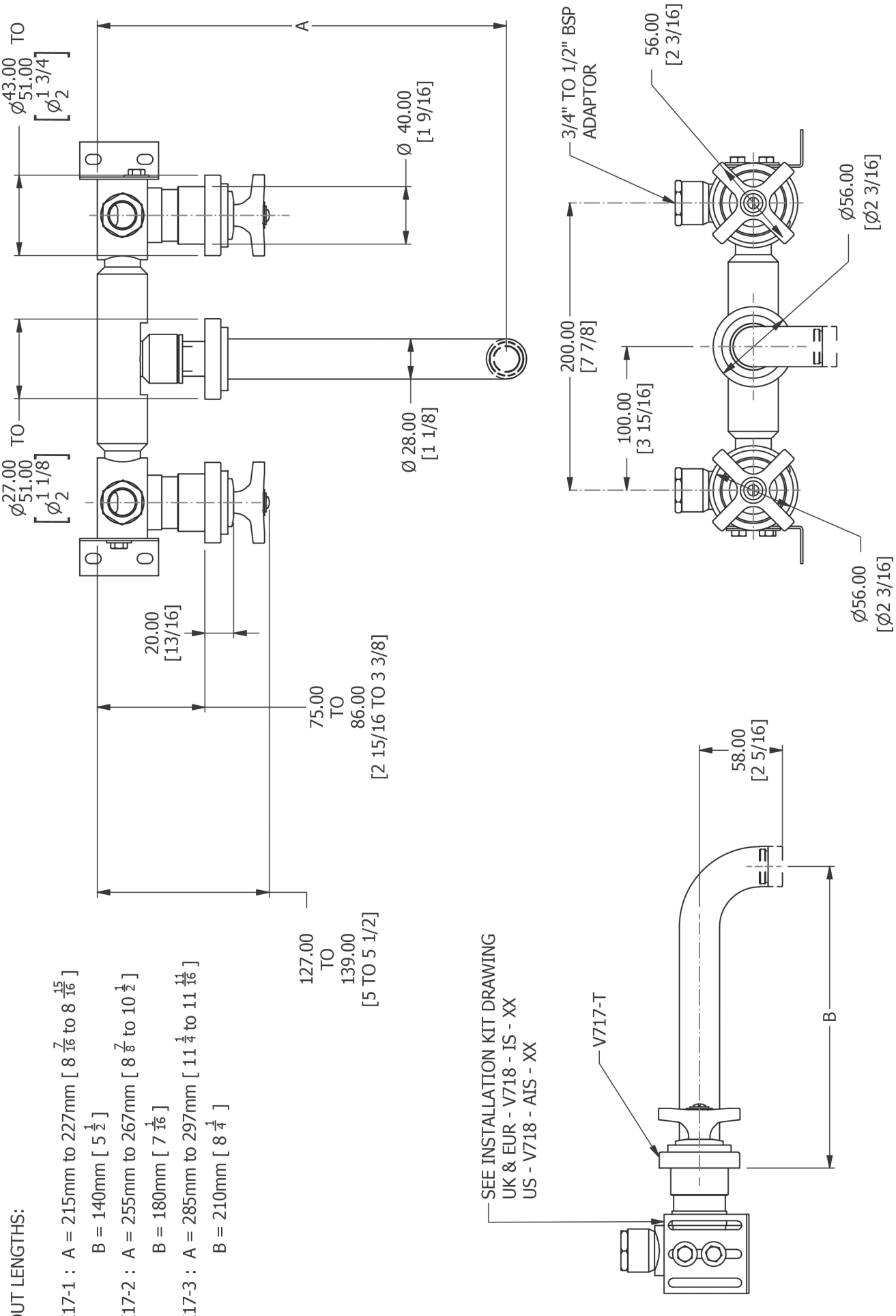

SPOUT LENGTHS:

V7K17-1 : A = 215mm to 227mm [8 $\frac{7}{16}$ to 8 $\frac{15}{16}$]
B = 140mm [5 $\frac{1}{2}$]

V7K17-2 : A = 255mm to 267mm [8 $\frac{7}{8}$ to 10 $\frac{1}{2}$]
B = 180mm [7 $\frac{1}{16}$]

V7K17-3 : A = 285mm to 297mm [11 $\frac{1}{4}$ to 11 $\frac{11}{16}$]
B = 210mm [8 $\frac{1}{4}$]

Dimension Key

V7K17-XK/ V7KALL17-XK

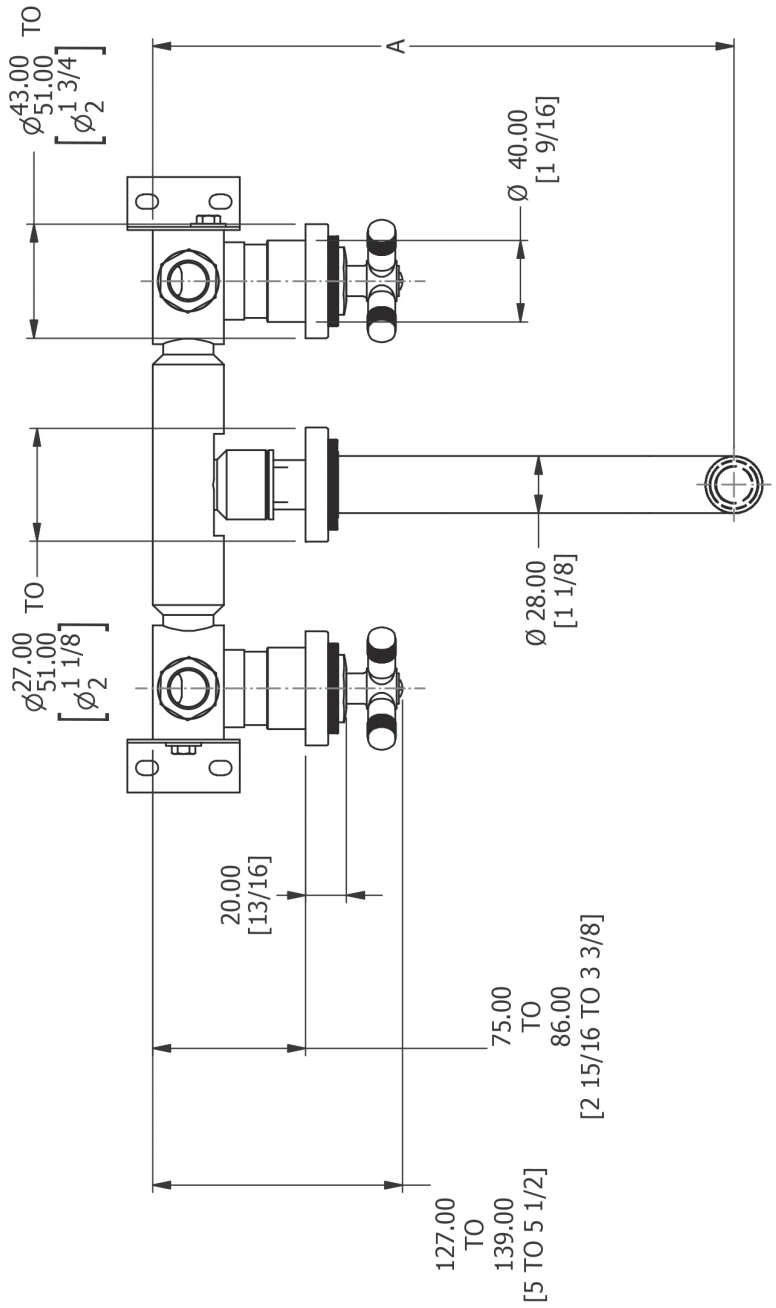

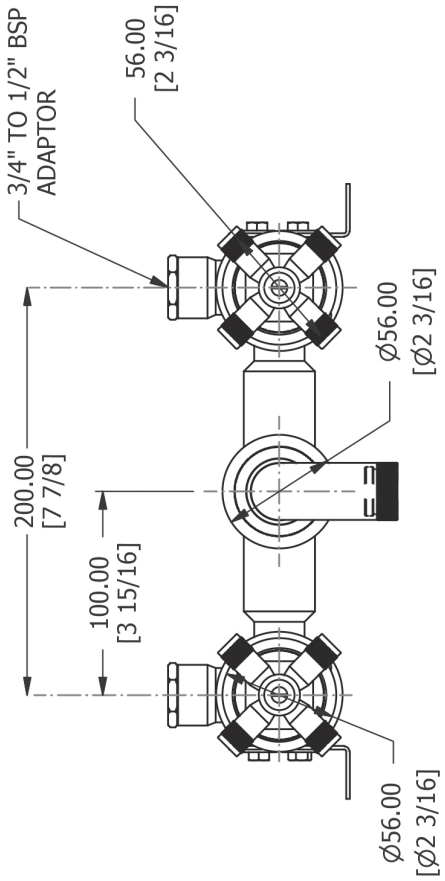

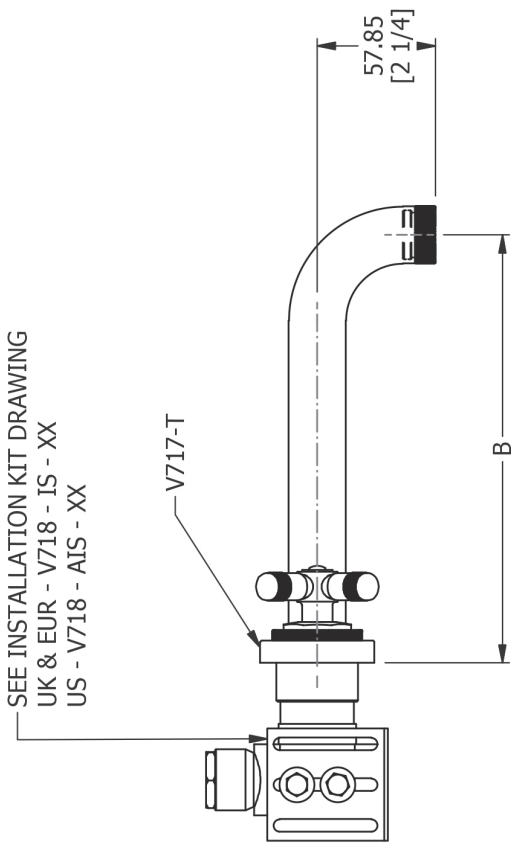

SPOUT LENGTHS:

V7K17-1 : A = 215mm to 227mm [8 $\frac{7}{16}$ to 8 $\frac{15}{16}$]
B = 140mm [5 $\frac{1}{2}$]

V7K17-2 : A = 255mm to 267mm [8 $\frac{7}{8}$ to 10 $\frac{1}{2}$]
B = 180mm [7 $\frac{1}{16}$]

V7K17-3 : A = 285mm to 297mm [11 $\frac{1}{4}$ to 11 $\frac{11}{16}$]
B = 210mm [8 $\frac{1}{4}$]

Dimension Key

V7K17-LL/ V7KALL17-LL

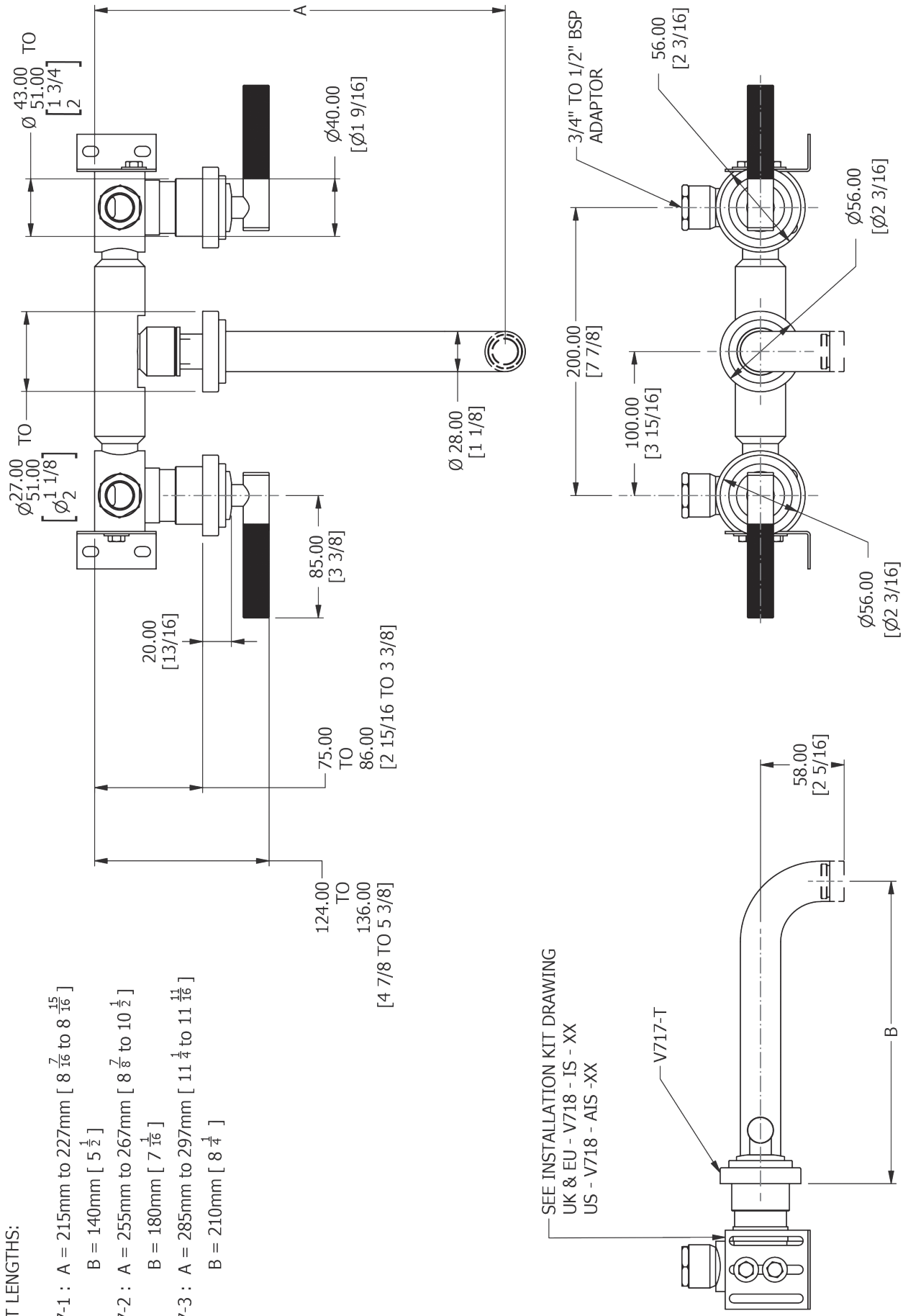

SPOUT LENGTHS:

V7K17-1 : A = 215mm to 227mm [8 $\frac{7}{16}$ to 8 $\frac{15}{16}$]
B = 140mm [5 $\frac{1}{2}$]

V7K17-2 : A = 255mm to 267mm [8 $\frac{7}{8}$ to 10 $\frac{1}{2}$]
B = 180mm [7 $\frac{1}{16}$]

V7K17-3 : A = 285mm to 297mm [11 $\frac{1}{4}$ to 11 $\frac{11}{16}$]
B = 210mm [8 $\frac{1}{4}$]

Dimension Key

V7K17-LW/ V7KALL17-LW

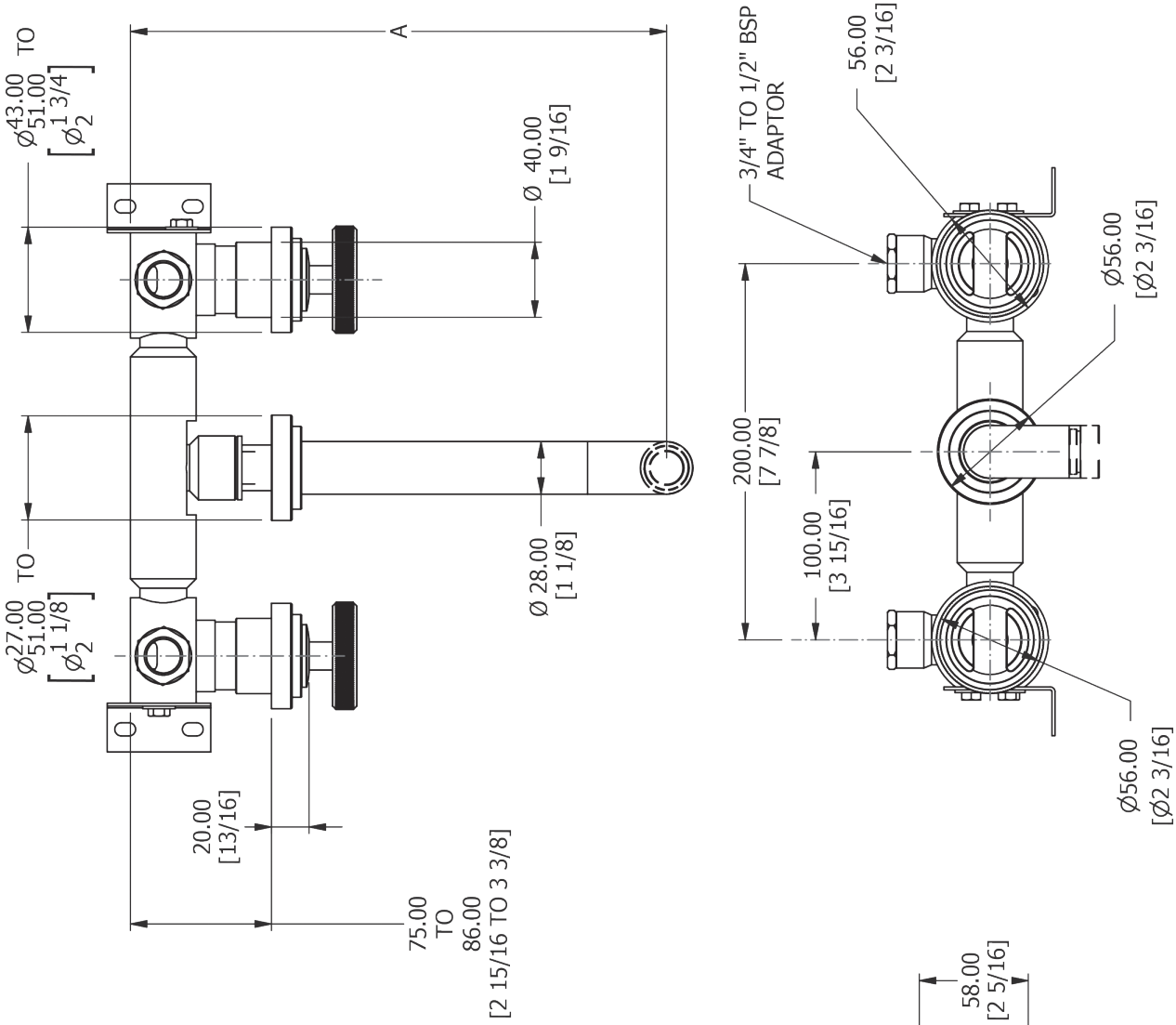

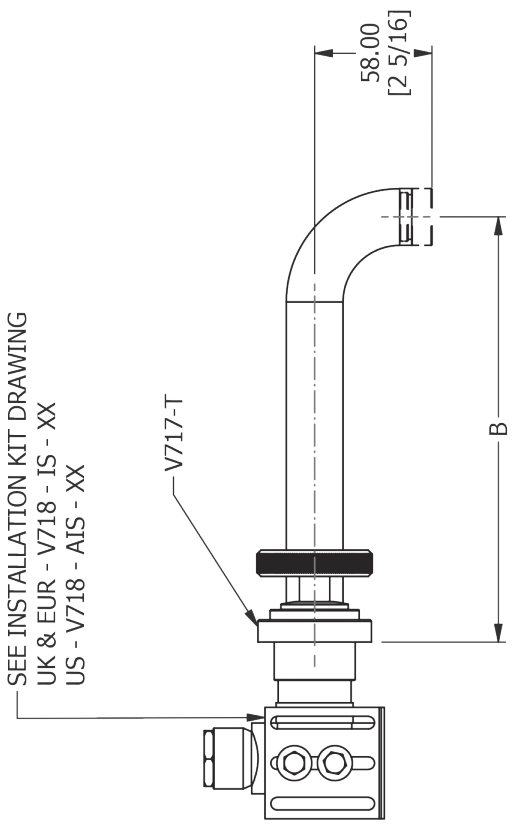

SPOUT LENGTHS:

V7K17-1 : A = 215mm to 227mm [8 $\frac{7}{16}$ to 8 $\frac{15}{16}$]
B = 140mm [5 $\frac{1}{2}$]

V7K17-2 : A = 255mm to 267mm [8 $\frac{7}{8}$ to 10 $\frac{1}{2}$]
B = 180mm [7 $\frac{1}{16}$]

V7K17-3 : A = 285mm to 297mm [11 $\frac{1}{4}$ to 11 $\frac{11}{16}$]
B = 210mm [8 $\frac{1}{4}$]

Flow Rates
V717

Bar	1.0	2.0	3.0	4.0	5.0
L.P/M	3.4	4.9	6.2	7.2	8.2

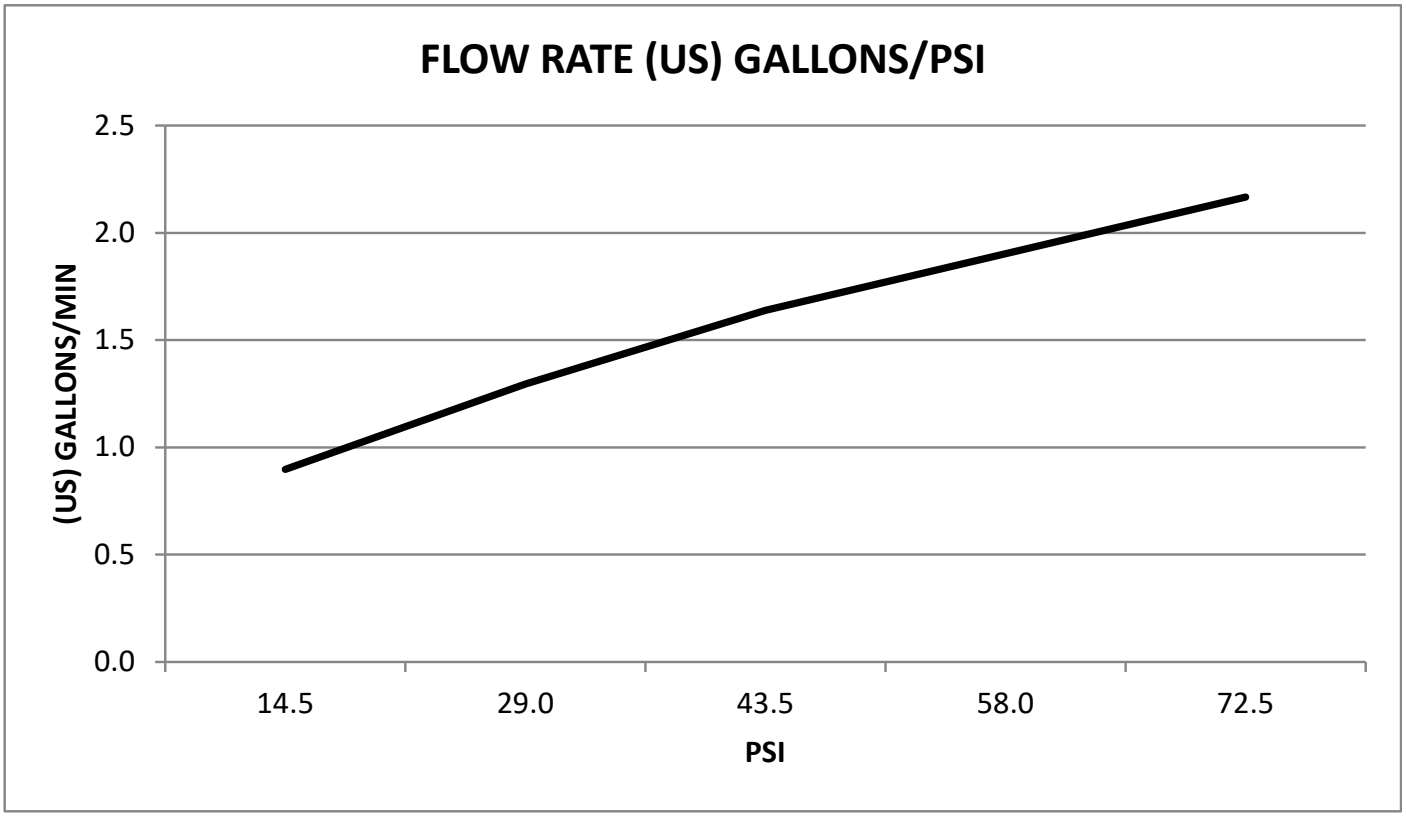

PSI	14.5	29.0	43.5	58.0	72.5
L.P/M	0.9	1.3	1.6	1.9	2.2

The flow rate data provided in this document is indicative of each product and is given in an open outlet condition. Installation design, external connections and fittings not supplied may affect the data provided.

Spares Information

V717

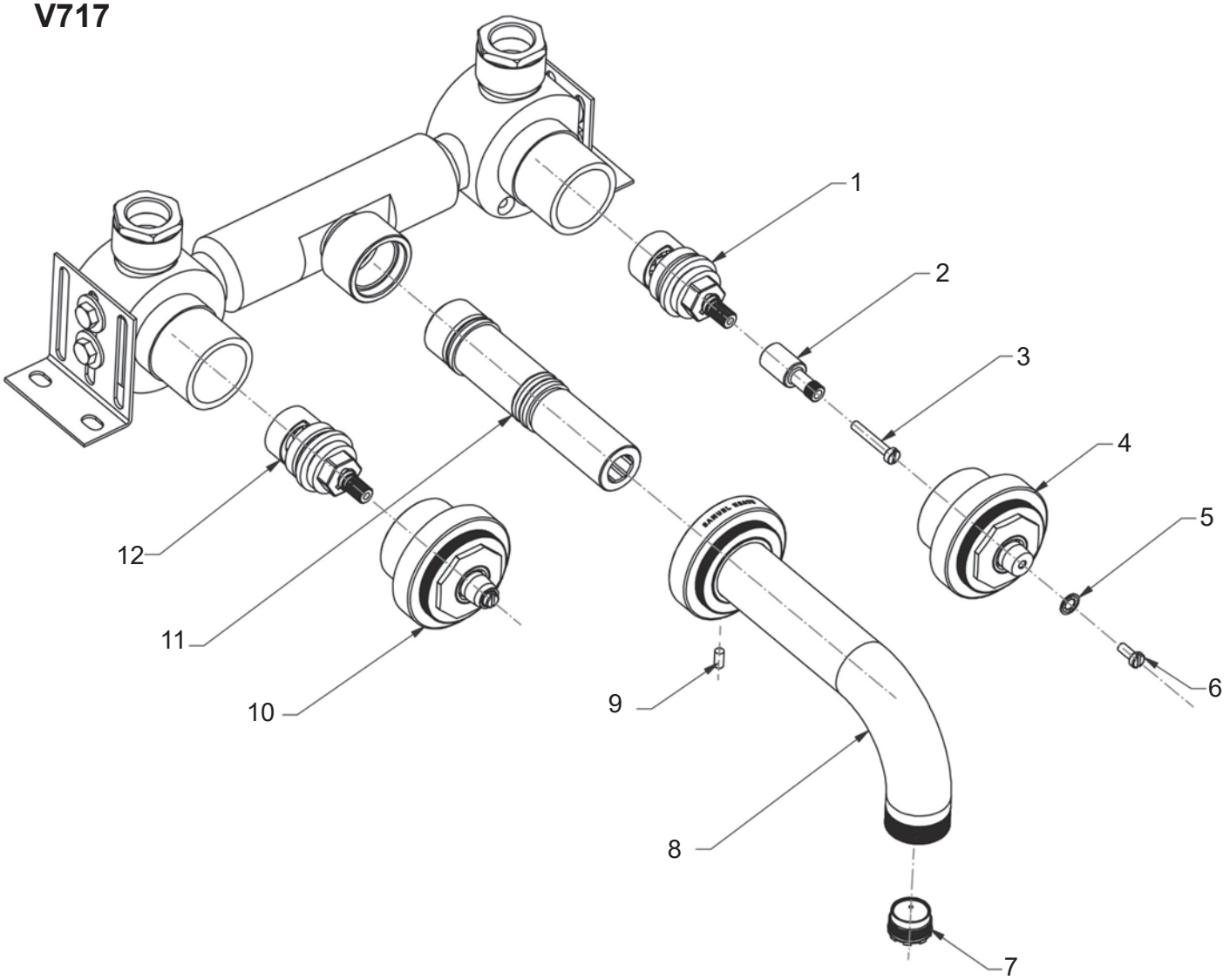

Item	Part No.	Description
1	VS56043	CD Valve (Anti-Clockwise Closing)
2	-	Spindle Adapter
3	-	Long Screw
4	-	Side Valve Body
5	-	Washer
6	-	Short Screw
7	-	Aerator
8	-	Spout Assembly
9	-	Grub Screw
10	-	Side Valve Body
11	-	Spout Extension
12	VS56044	CD Valve (Clockwise Closing)

Spares Information

V717-ALL

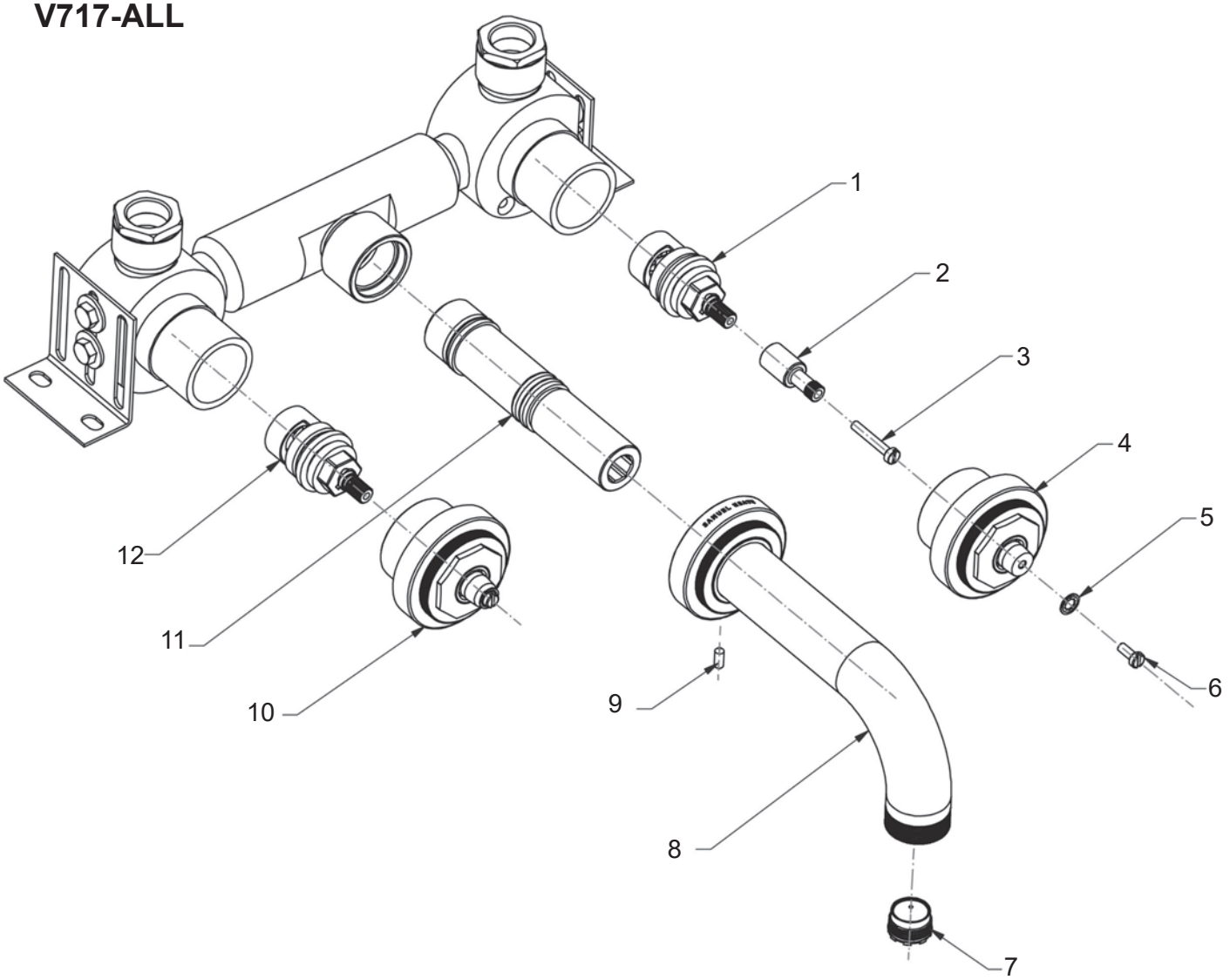

Item	Part No.	Description
1	VS56043-LL	CD Valve (Anti-Clockwise Closing)
2	-	Spindle Adapter
3	-	Long Screw
4	-	Side Valve Body
5	-	Washer
6	-	Short Screw
7	-	Aerator
8	-	Spout Assembly
9	-	Grub Screw
10	-	Side Valve Body
11	-	Spout Extension
12	VS56044-LL	CD Valve (Clockwise Closing)

Installation

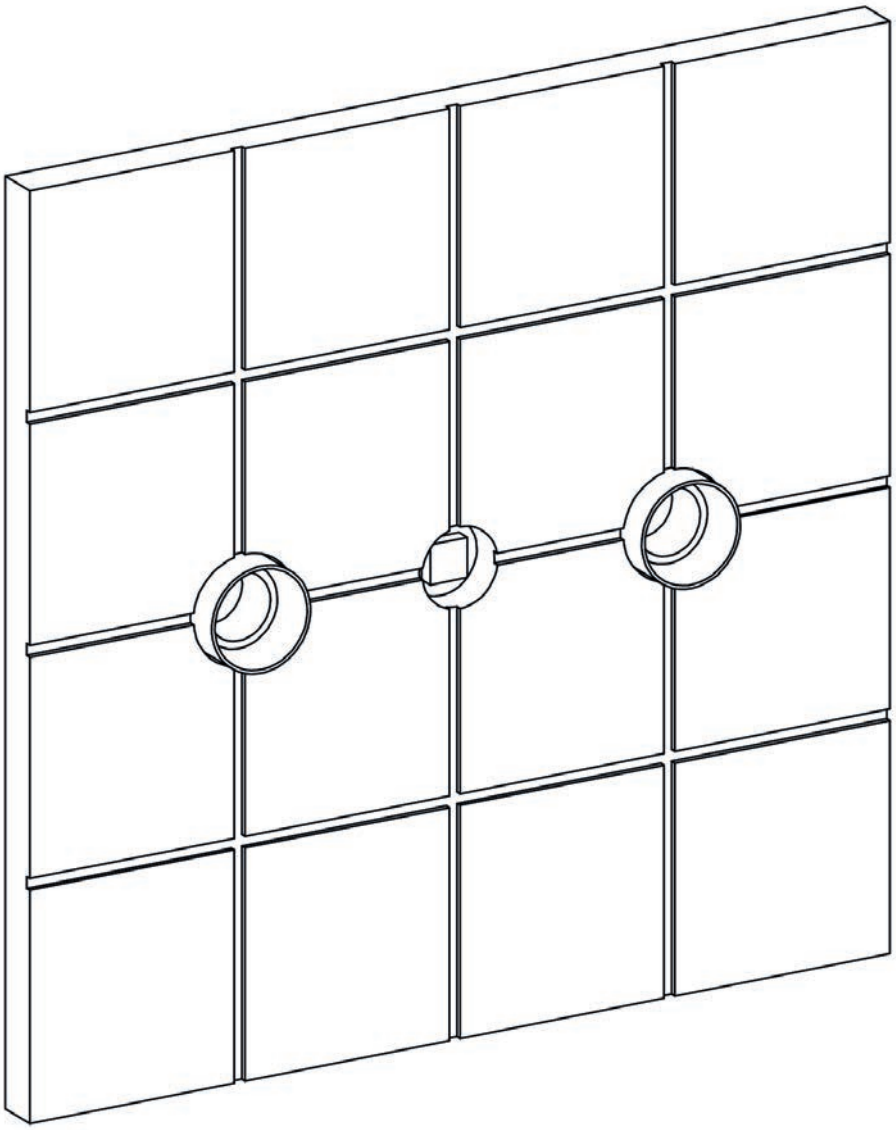

1. Install the finished surface, ensuring the finished surface is in accordance with the minimum and maximum installation depths shown on the drawings in the front of this booklet.

2. Remove the red thread covers.

Set-Up

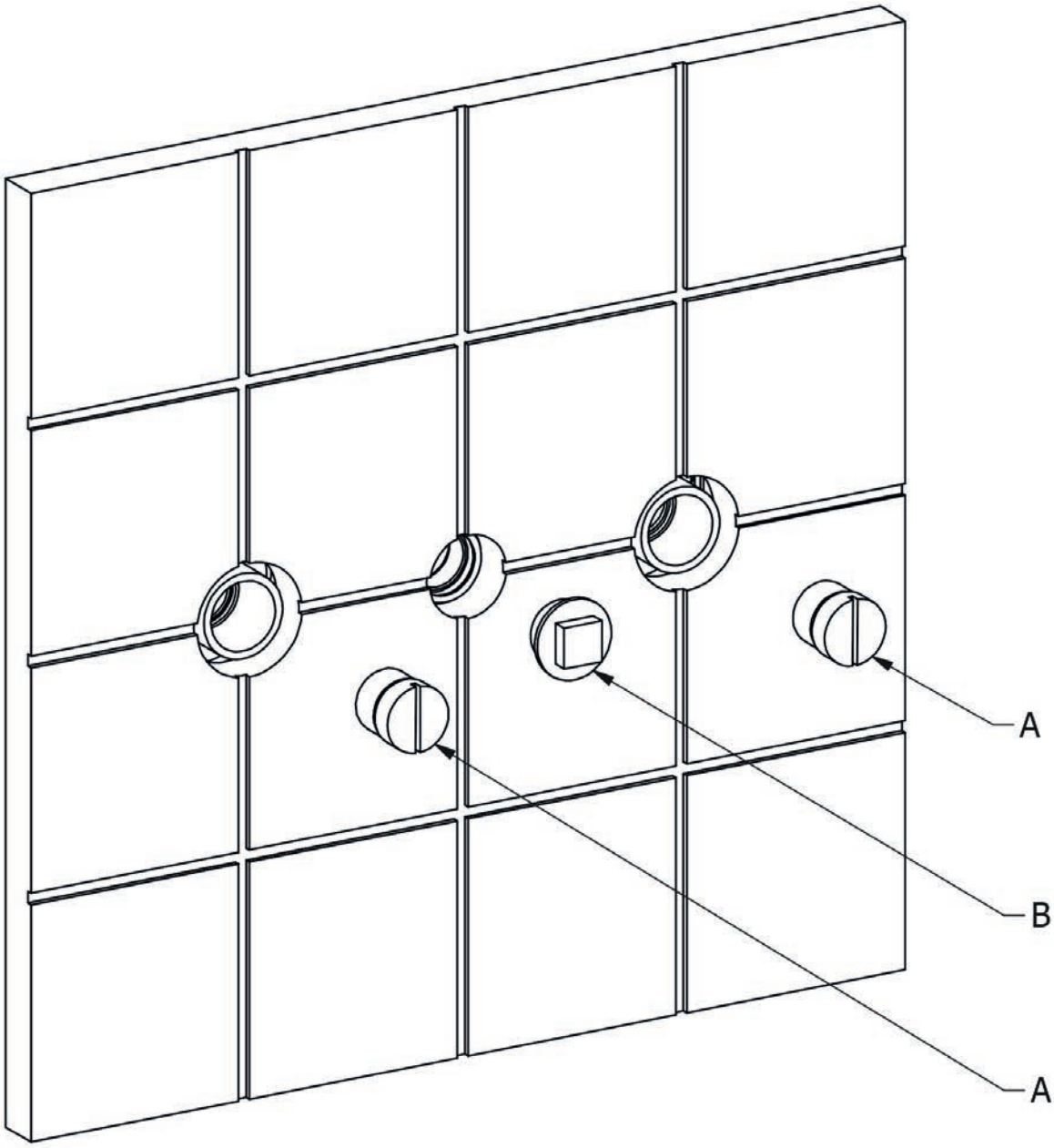

3. Ensure the supply to the installation system is isolated.

4. Remove side valve bungs (A) and spout outlet cap (B).

Set-Up

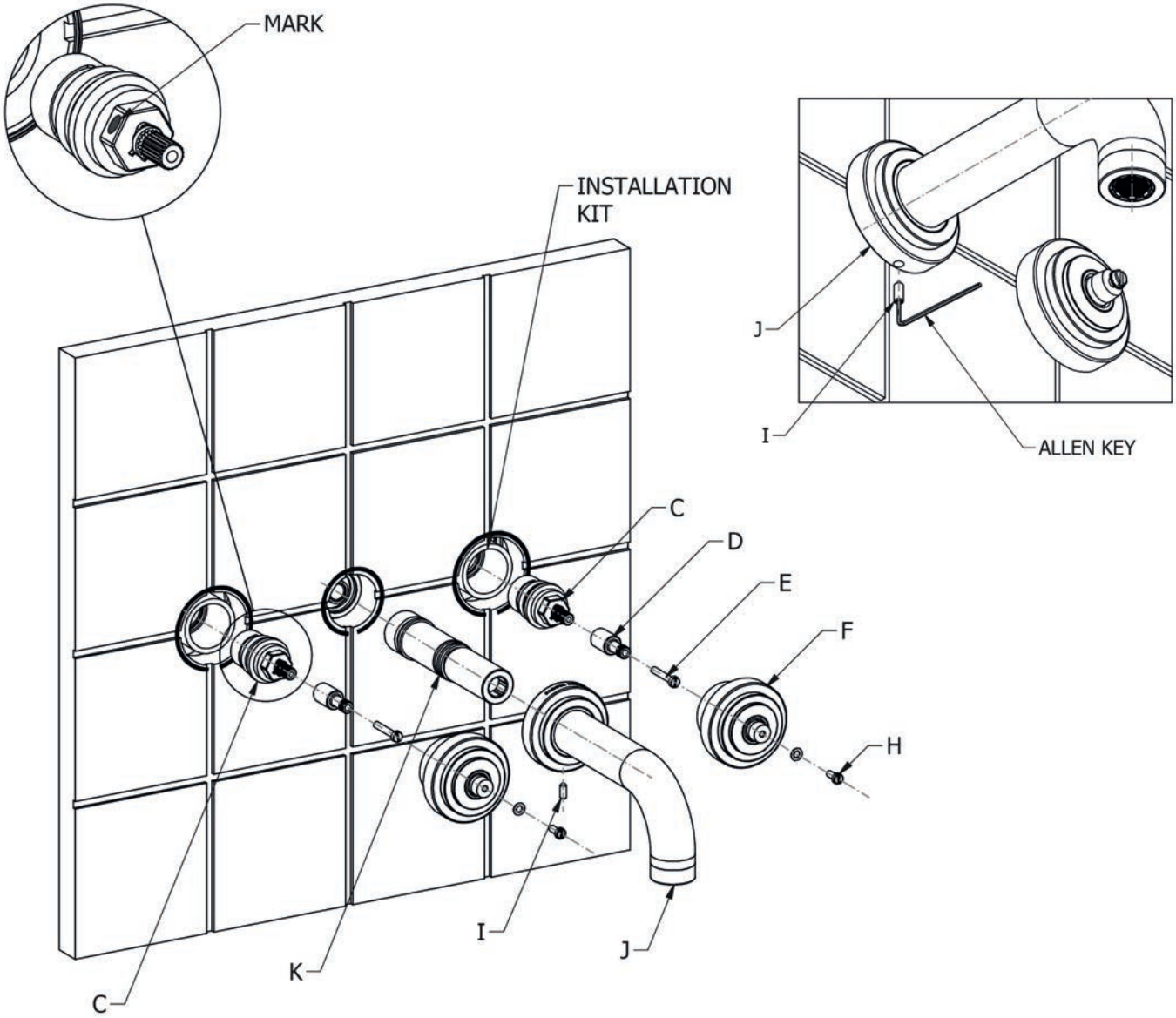

5. Screw in CD valves (C) into the installation kit ensuring that the left hand CD valve has the mark as shown. Ensure CD valves are fully tightened.

6. Push spindle adapters (D), onto CD valves (C) and secure using long screws (E).

7. Screw the side valve assemblies (F) onto installation kit. Apply suitable silicon sealant to the wall where the side valve assembly (F) will sit.

8. Screw spout tail (K) into the installation kit. Ensure the spout tail (K) is fully tightened using a 12mm Allen Key.

9. Slide spout assembly (J) onto spout tail (K). Apply suitable silicon sealant to the wall where spout assembly escutcheon (J) will sit.

10. Align spout assembly (J) and secure using grub screw (I) and an Allen key as shown. Ensure grub screw (I) is fully tightened.

Note: Screws (H) and washers (G) are for securing desired handle option.

Control Assembly Instructions - LF, LK, XF & XK

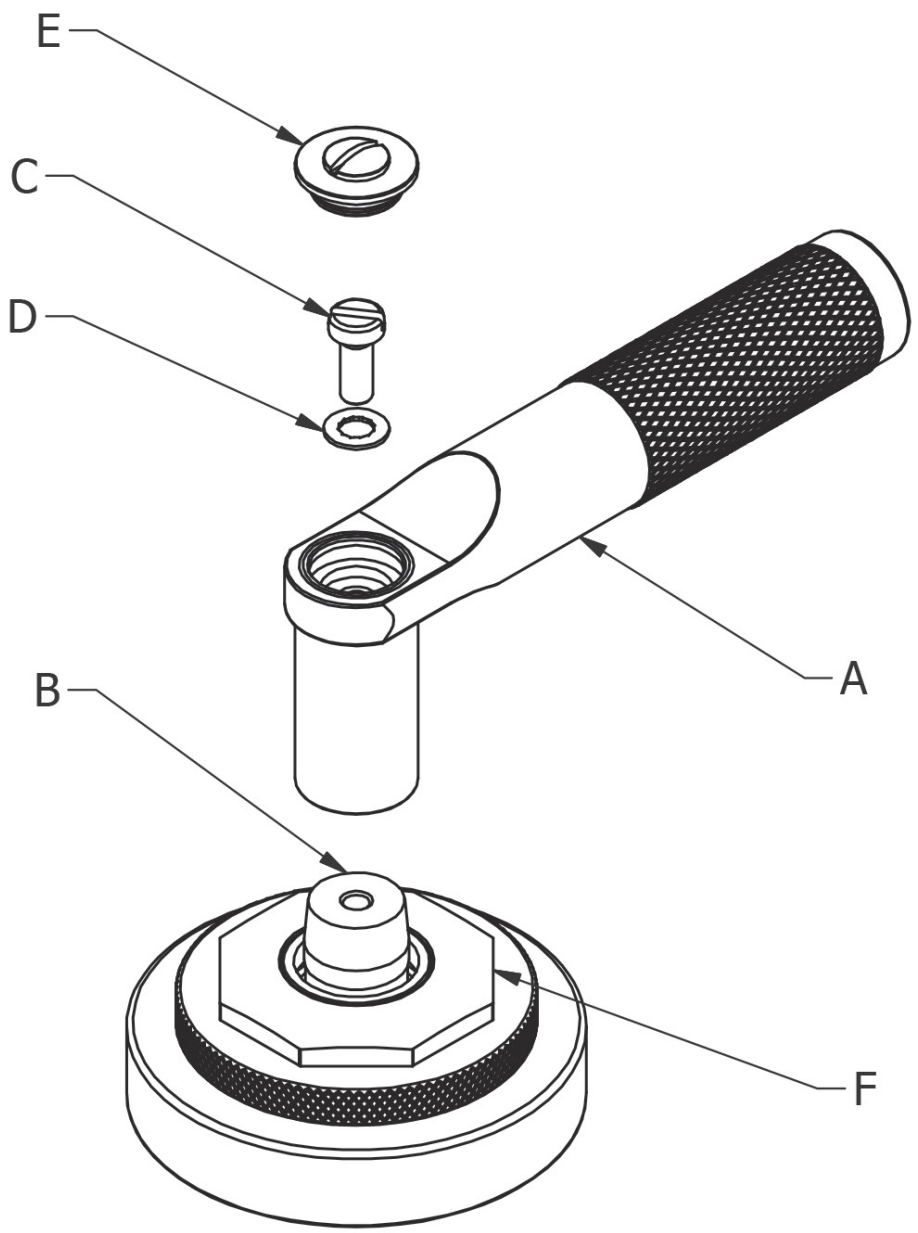

1. Screw handle (A) onto spindle (B) using screw (C) and washer (D).

2. Push indice (E) into the handle option (A) to conceal the fixing.

3. The octagonal nut (F) can be rotated to the desired angle.

Note: The taper on the spindle (B) will lock in to the female taper in the handle option (A).

To remove the handle option (A) remove the screw (C) and washer (D). The handle option (A) has an M5 thread through its central fixing hole, by screwing an M5 screw in to this it will push the handle option (A) and the spindle (B) apart.

Control Assembly Instructions - LL

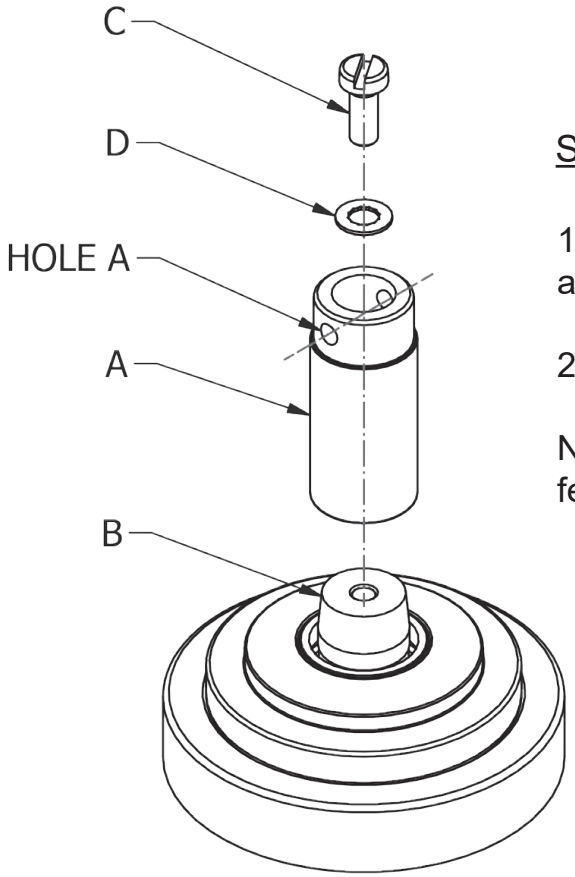

STEP 1

1. Secure stem (A) onto spindle (B) using screw (C) and washer (D)

2. Make note of the position of [HOLE A] for **STEP 2**

NOTE**:** The taper on the spindle (B) will lock into the female taper in the stem (A)

STEP 2

1. Push lever assembly (E) onto stem (A), ensuring [HOLE A] & [HOLE B] are in alignment

2. Secure lever assembly (E) using screw (F) and washer (D)

3. Push indice (G) into the lever assembly (E) as shown, to conceal the fixing

To remove the lever assembly (E), remove indice (G), screw (F) and washer (D). Lever assembly will then lift off, exposing the stem (A).

To remove the stem (A), remove screw (C) and washer (D). There is then an M5 thread through the central fixing hole on the stem (A). By screwing an M5 screw into this, it will push the stem (A) and the spindle (B) apart.

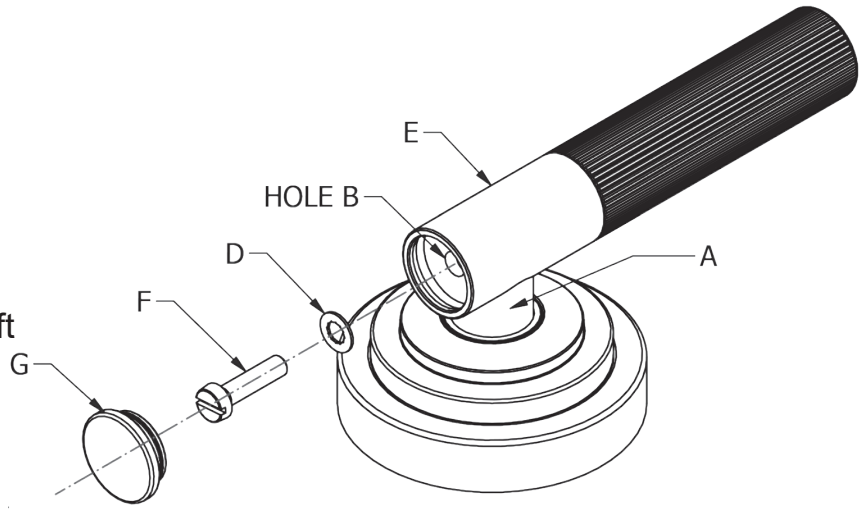

Control Assembly Instructions - LW

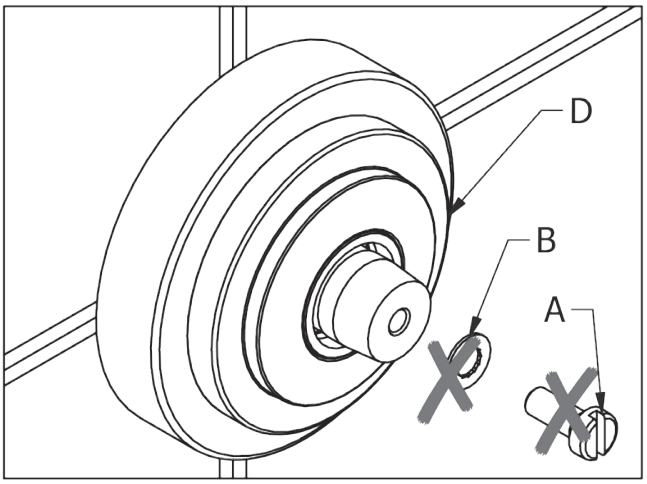

1. For installation of the hand wheel, M4 screw (A) and large anti-rotational washer (B) provided with the product can be discarded as they are not required for this control option.

2. Remove side valve assembly (D) from the wall, if installed.

3. Push hand wheel (C) through the centre of side valve assembly (D), then use the M3 screw (F) and small anti-rotational washer (E) to secure it in place, as shown.

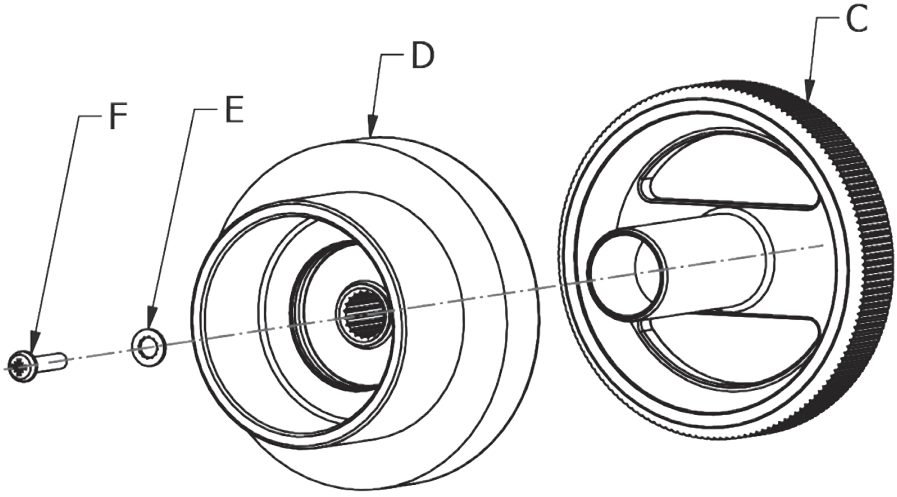

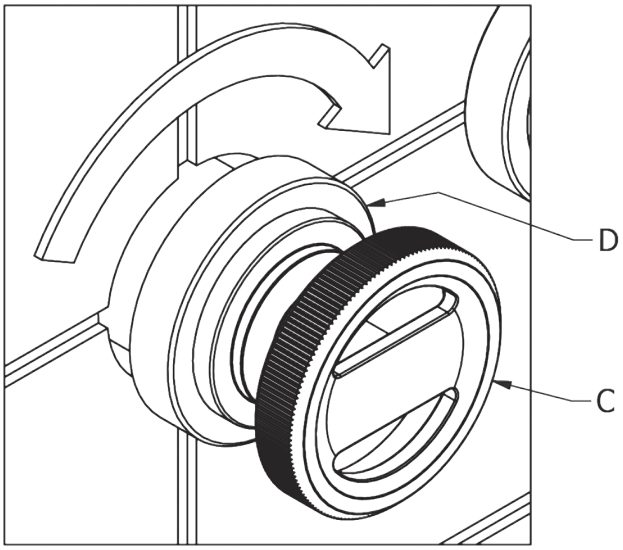

4. Rotate hand wheel (C) to desired angle for operation.

5. Screw side valve assembly (D) into the installation kit, ensuring that hand wheel (C) is held in position to retain desired angle of operation.

6. If required, apply a suitable silicon sealant to the wall where the side valve assembly (D) will sit.

IMPORTANT NOTES

1. Installation should be carried out by a competent engineer in accordance with water regulations.
2. Before installation ensure supply pipes are flushed clean as debris or loose particles will affect the effiency of the ceramic disc cartridge.
3. For mixer taps it is recommended that hot & cold pressures are equally balanced.
4. To help maintain the high quality finish please clean with a soft damp cloth. Do not use abrasive polish or cleaners. Stains may be removed using diluted washing up liquid.
5. Ceramic cartridges in hard water areas. To prolong the lifespan and reduce servicing periods of your Samuel Heath tap we recommend that a suitable water softener be fitted. Consult your installer/designer for details.
6. Please note that as with all tap and shower ware it will be necessary from time to time for the products to be serviced, this should be carried out by a qualified Plumbing Engineer.

NOTES IMPORTANTES

1. L'installation doit être faite par un ingénieur qualifié, selon les réglements du Service Eau.
2. Avant l'installation, il faut s'assurer que les tuyaux d'approvisionnement sont complètement purgés. Les déchets flottants auront un effet détrimentaire sur l'efficacité de la cartouche céramique.
3. Il est recommandé que les pressions de l'eau chaude et eau froide des mitigeurs et mélangeurs soient maintenues à un niveau égal.
4. Pour conserver la finition de haute qualité, nettoyer avec un chiffon doux et humide. N'employer jamais de la cire et des produits abrasifs. Les tâches peuvent être enlevées à l'aide de liquide vaisselle pur.
5. Cartouches en céramique dans les régions à eau calcaire. Pour prolonger la durée et réduire l'entretien de votre robinetterie Samuel Heath, nous recommandons d'utiliser un adoucisseur d'eau convenable. Veuillez consulter votre installateur/fournisseur pour plus de renseignements.
6. Veuillez noter qu'un entretien sera nécessaire de temps en temps et doit être effectué par un installateur qualifié.

WICHTIGE HINWEISE

1. Installation sollte durch einen kompetenten Fachmann und nach den üblichen Vorschriften ausgeführt werden.
2. Vor Installation Wasserleitung gründlich durchspülen. Verschmutzung wird die Funktion der Kartusche erheblich einschränken.
3. Für Mischbatterien ist es wichtig, daß Wasser mit gleichem Druck eingefuhrt wird.
4. Um den optimalen Zustand dieses Produktes zu erhalten, wischen Sie es bitte nur mit einem feuchten, weichen Lappen ab. Auf keinen Fall Scheuermittel verwenden. Flecken lassen sich mit unverdünntem Geschirrspülmittel entfernen.
5. Keramikkartuschen in Hartwasserbereichen. Um die Lebensdauer zu verlängern und Wartungszeiten zu reduzieren empfiehlt Samuel Heath den Einsatz eines geeigneten Wasserenthärters. Fragen Sie Ihren Installateur/Designer um Rat.
6. Bitte merken Sie, dass alle Armaturen ab und zu eine Wartung brauchen. Diese soll durch einen kompetenten Installateur ausgeführt werden.

ATENCION

1. La instalación se debe realizar por un fontanero.
2. Antes de la instalación, deben pulgar las tuberias dejándo correr el agua por las tuberias para que arrastren los residuos de montaje/obra, con el motivo de que no afecte la eficacia del cartucho de ceramica.
3. Para grupo baño/ducha se recomienda que las presiones del agua caliente y frio sean equilibradas.
4. Para ayudar a mantener el acabado de este producto, limpiar con un paño húmedo suave. No se debe emplear productos abrasivos de baño. Las manchas se pueden quitar empleándo liquido lava-vajillas puro.
5. Cartuchos cerámicos en áreas de aguas duras . Para prolongar su vida útil y reducir los periodos de reparación de su grifo SamuelHeath recomendamos la instalación de un descalcificador de agua. Consulte a su instalador para más detalles.
6. Igual que con todo tipo de griferia y duchas, de vez en cuando será necesario llevar a cabo una revisión al producto; esto deberia ser realizado por un fontanero calificado.

ATTENZIONE

1. L'impianto deve essere montato da personale tecnico in conformità alle vigenti leggi.
2. Prima dell'installazione assicurarsi che le tubature dell' aqua siano pulite. Detriti o residui di lavorazione compromettono l'efficenza del cartuccio.
3. Per i gruppi, si raccomanda che le pressioni acqua calda e acqua fredda siano ugualmente bilanciate.
4. Per mantenere la finizione di ottima qualità, pulire con un panno soffice e inumidito. Non usare creme lucidanti e materiali abrasivi. Le macchie potranno essere tolte usando del detersivo per piatti puro.
5. Come con tutti i tipi di rubinetti e docce, di volta in volta è necessario effettuare una revisione al prodotto; questo dovrebbe essere fatto da un idraulico qualificato.

SAMUEL HEATH

Head Office and Customer Service
Leopold Street
Birmingham
England
B12 0UJ

T: +44 (0)121 766 4200

Info@samuel-heath.com
www.samuel-heath.co.uk

US Customer Service
usa@samuel-heath.com
www.samuel-heath.com

8-40473
Issue: F