SAMUEL HEATH

Product Data Sheet

V135-IS Concealed ½” Thermostatic Rough

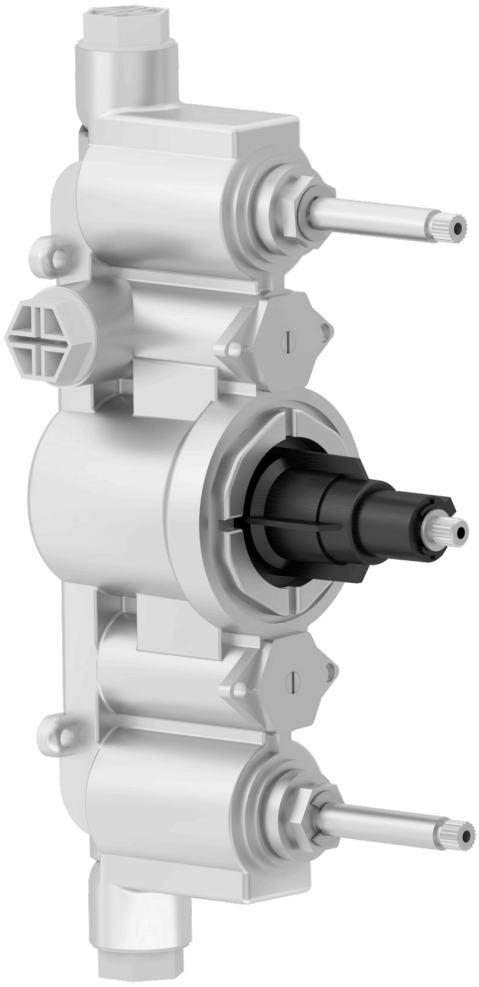

REFER TO FITTING DEPTHS PRIOR TO INSTALLATION

Installation Fitting Depths

Dimension "A"		
Trim Set		Maximum and Minimum Depths (from back of shower valve to plate position (mm))
XENON	V102-T	71.80 to 106.70
Fairfield	V202-T	73.00 to 84.30
STYLE MODERNE	V602-T	71.80 to 82.80
LANDMARK COLLECTION	V702-T	110.00 to 119.00
ONE HUNDRED COLLECTION	T1002-T	109.00 to 120.00
forme	T2002-T	120.00 to 131.00

Hot and Cold Conditions of Use

Hot Supply Temperature - °C	55 to 65
Cold Supply Temperature - °C	Equal to or less than 20°

Dimension Key

Note: For the correct installation depths ("A") please see tables on page 2 as they may differ per trim set.

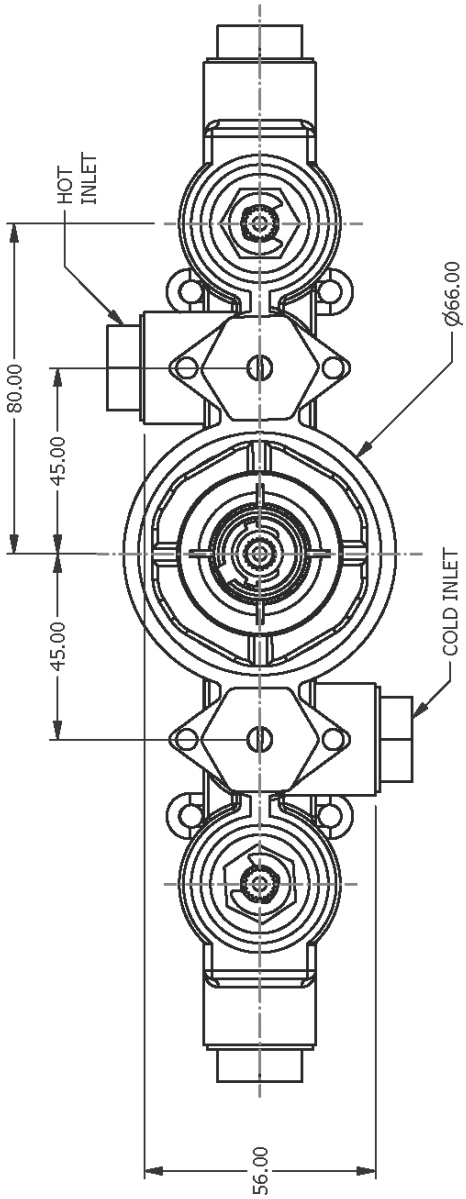

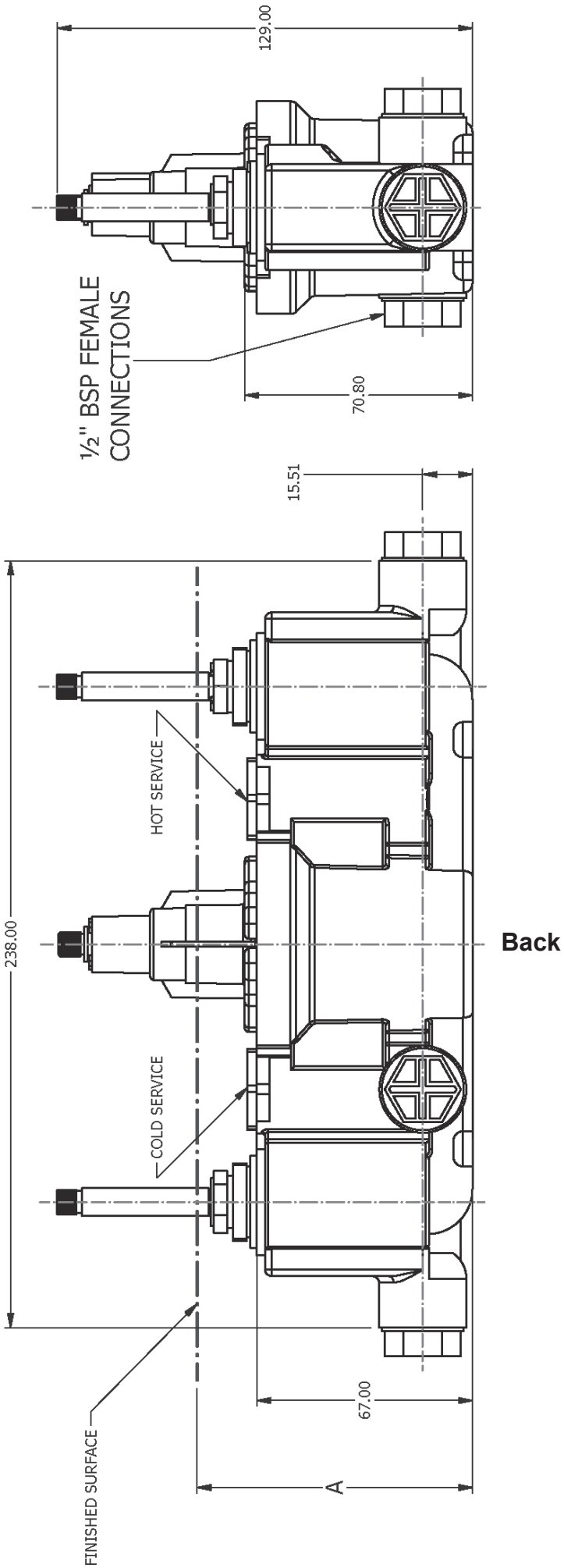

Back

Flow Rates

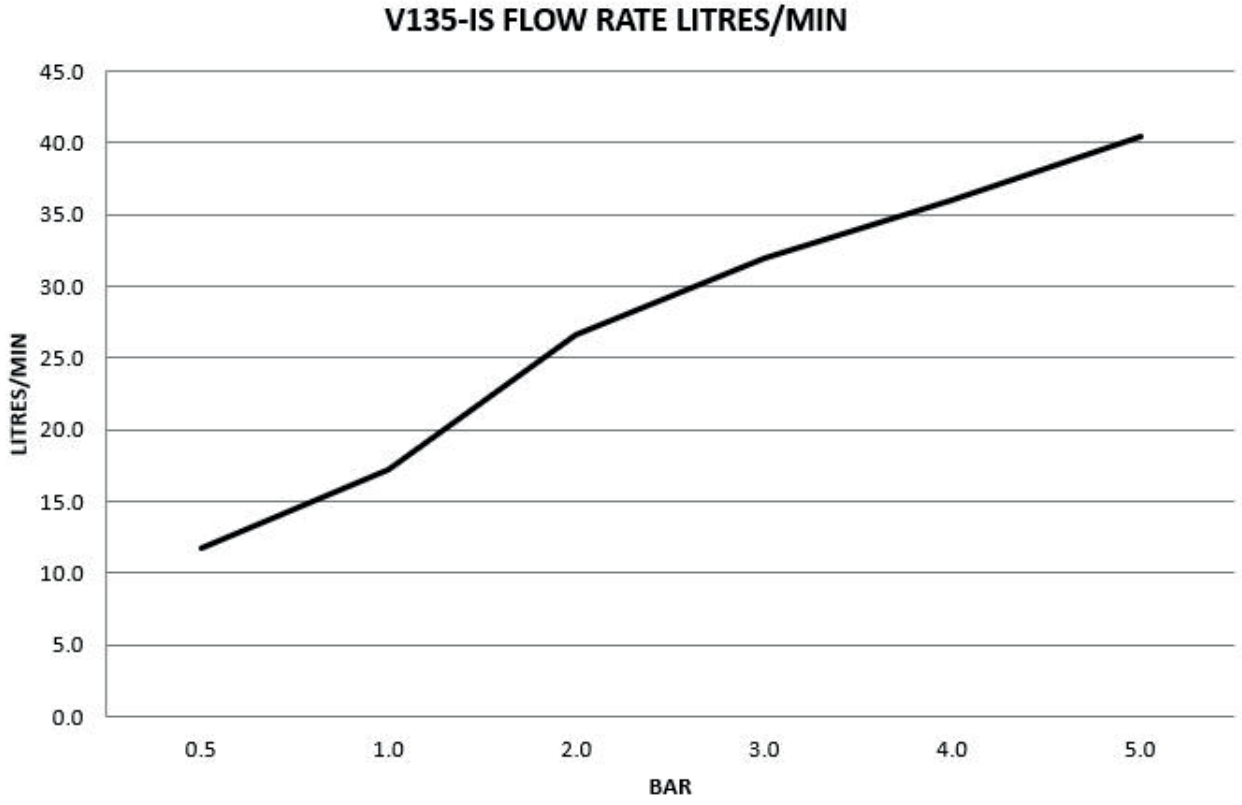

The flow rate data provided in this document is indicative of each product and is given in an open outlet condition. Installation design, external connections and fittings not supplied may affect the data provided.

Spares Information

V135-IS

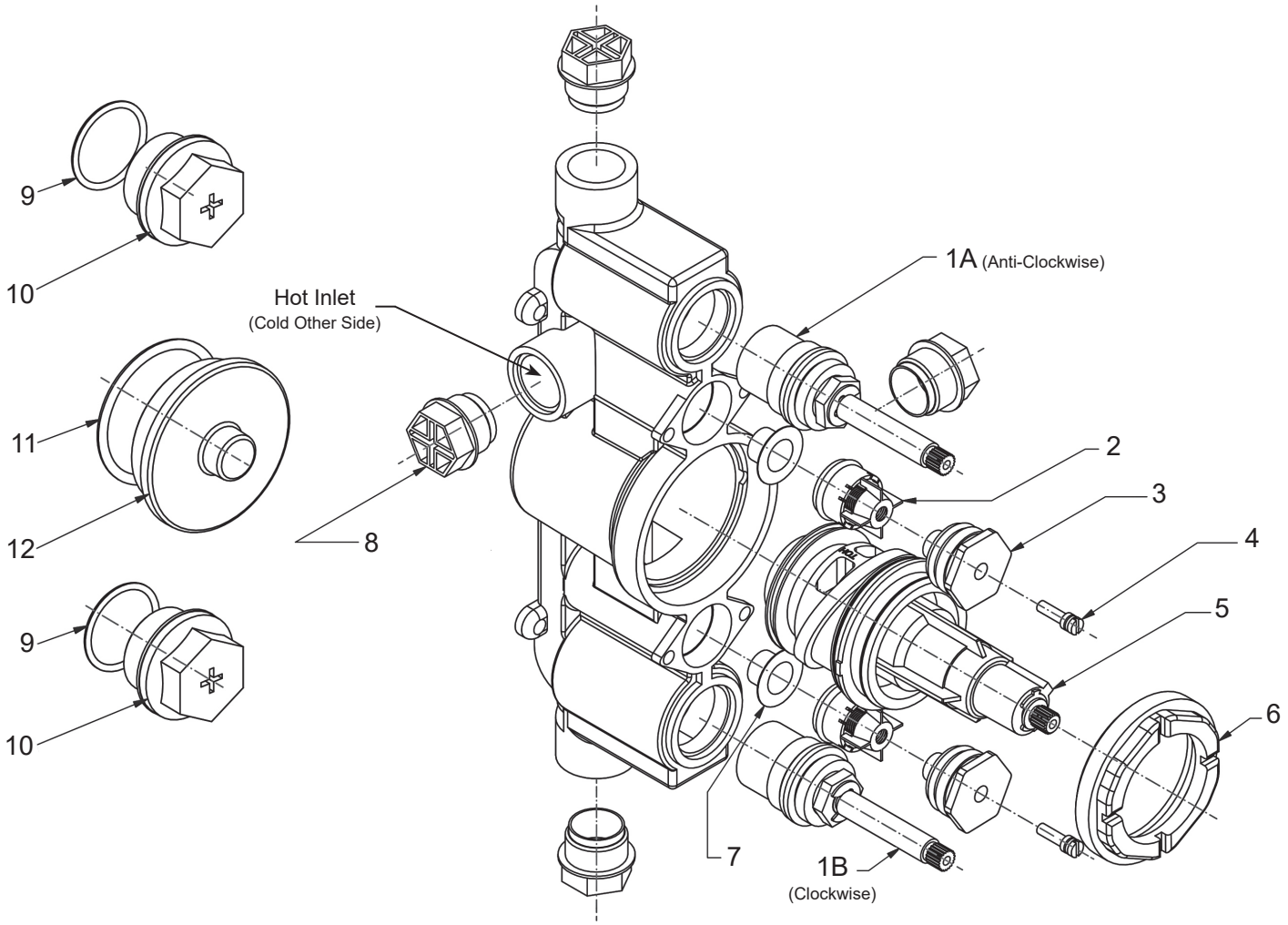

Item	Part No.	Description
1a	VS56046	CD Valve (Anti-Clockwise Closing)
1b	VS56047	CD Valve (Clockwise Closing)
2	-	Check Valve
3	-	Service Nut
4	-	Adjustment Screw
5	VS56065	Thermostatic Cartridge
6	-	Locking Nut
7	-	Filter
8	-	Dust Cover
9	-	O-Ring
10	-	1/2” BSP Plug
11	-	O-Ring
12	-	Thermo Blanking Cap

Installation

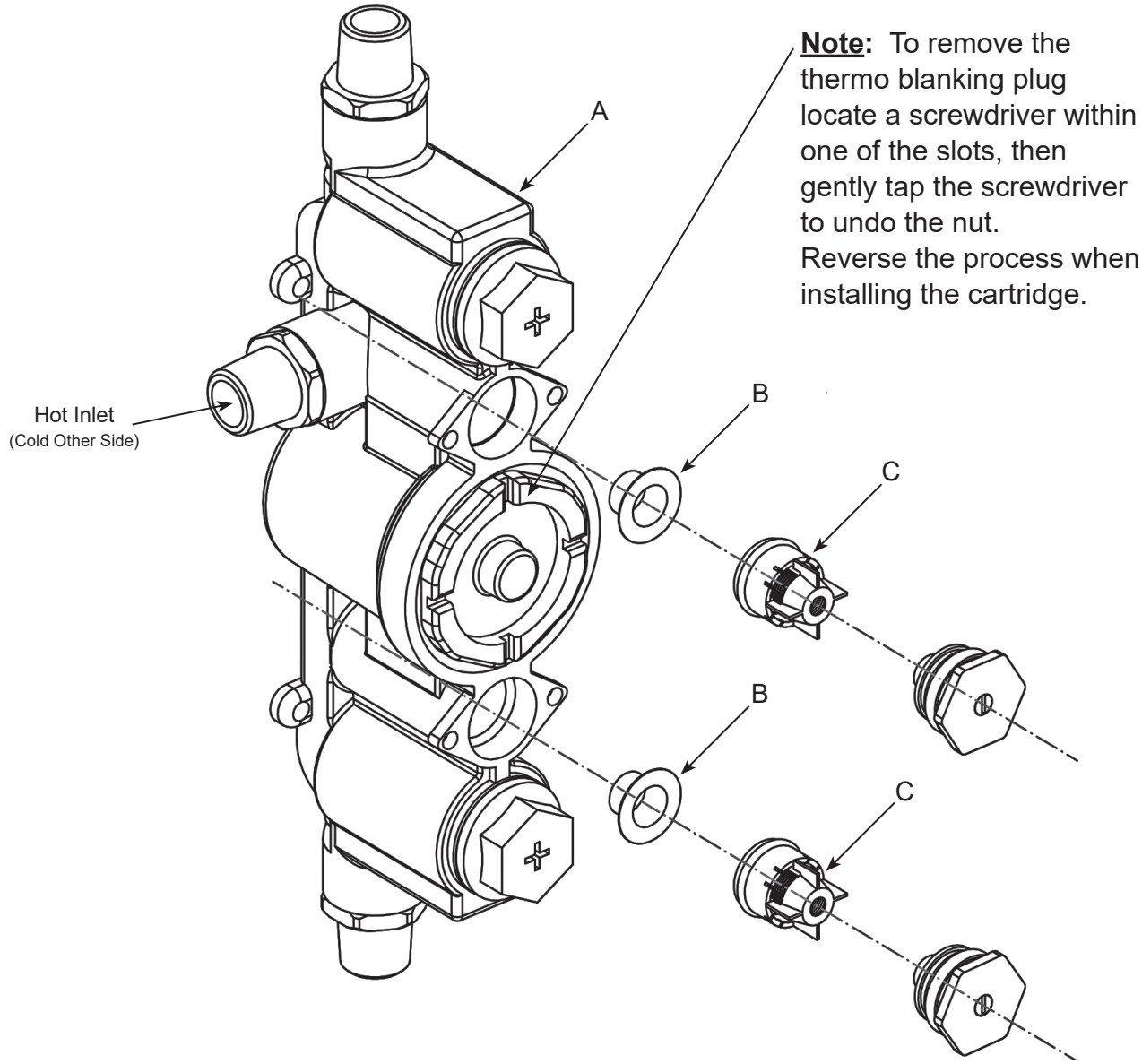

Note: To remove the thermo blanking plug locate a screwdriver within one of the slots, then gently tap the screwdriver to undo the nut.
Reverse the process when installing the cartridge.

1. **Ensuring that the fitting depths at the front of this booklet are met for the appropriate trim set,** install the valve (A) to the pipework in the desired location and secure to a suitable area using screws (not provided). Make sure all pipe work is securely clipped.

2. Before flushing the system and with the hot & cold supplies off, remove the hot and cold filters (B) and check valves (C).

3. Ensure system flushing is carried out below 2 BAR.

4. After flushing the system,once again turn off the supplies and replace the filters (B) and check valves (C).

5. Ensure check valves & filters are replaced in the orientation shown.

Note: To pressure test the system, replace the blanking caps with the cartridges (D, E & F) provided.

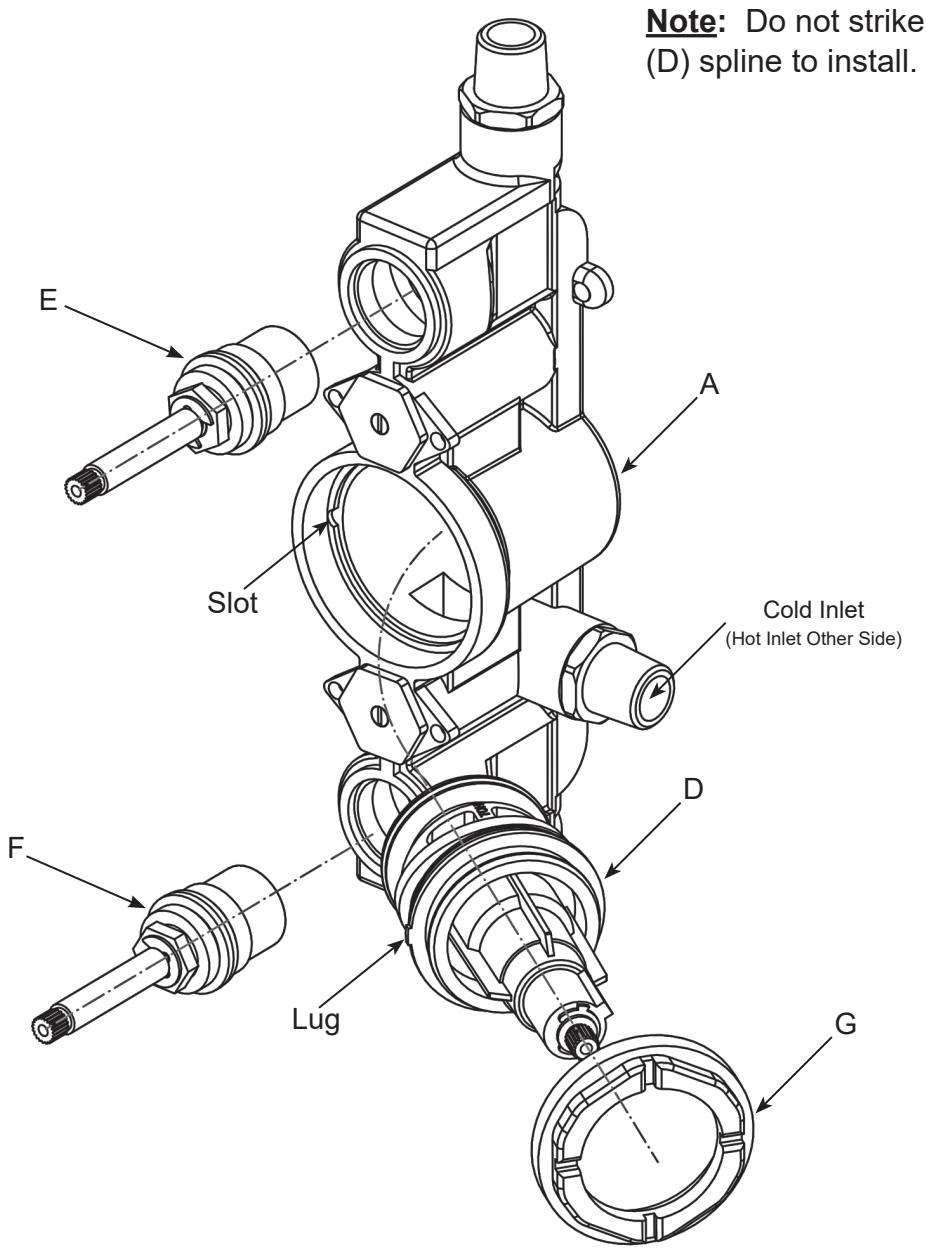

Note: Do not strike the cartridge (D) spline to install.

6. Insert the temperature cartridge (D) into the valve (A) ensuring that the cartridge lug sits in the left hand slot as shown.

7. Lock cartridge in place using lock nut (G).

8. Screw in volume cartridges (E & F).

IMPORTANT NOTES

1. Installation should be carried out by a competent engineer in accordance with water regulations.
2. Before installation ensure supply pipes are flushed clean as debris or loose particles will affect the effiency of the ceramic disc cartridge.
3. For mixer taps it is recommended that hot & cold pressures are equally balanced.
4. To help maintain the high quality finish please clean with a soft damp cloth. Do not use abrasive polish or cleaners. Stains may be removed using diluted washing up liquid.
5. Ceramic cartridges in hard water areas. To prolong the lifespan and reduce servicing periods of your Samuel Heath tap we recommend that a suitable water softener be fitted. Consult your installer/designer for details.
6. Please note that as with all tap and shower ware it will be necessary from time to time for the products to be serviced, this should be carried out by a qualified Plumbing Engineer.

NOTES IMPORTANTES

1. L'installation doit être faite par un ingénieur qualifié, selon les réglements du Service Eau.
2. Avant l'installation, il faut s'assurer que les tuyaux d'approvisionnement sont complètement purgés. Les déchets flottants auront un effet détrimentaire sur l'efficacité de la cartouche céramique.
3. Il est recommandé que les pressions de l'eau chaude et eau froide des mitigeurs et mélangeurs soient maintenues à un niveau égal.
4. Pour conserver la finition de haute qualité, nettoyer avec un chiffon doux et humide. N'employer jamais de la cire et des produits abrasifs. Les tâches peuvent être enlevées à l'aide de liquide vaisselle pur.
5. Cartouches en céramique dans les régions à eau calcaire. Pour prolonger la durée et réduire l'entretien de votre robinetterie Samuel Heath, nous recommandons d'utiliser un adoucisseur d'eau convenable. Veuillez consulter votre installateur/fournisseur pour plus de renseignements.
6. Veuillez noter qu'un entretien sera nécessaire de temps en temps et doit être effectué par un installateur qualifié.

WICHTIGE HINWEISE

1. Installation sollte durch einen kompetenten Fachmann und nach den üblichen Vorschriften ausgeführt werden.
2. Vor Installation Wasserleitung gründlich durchspülen. Verschmutzung wird die Funktion der Kartusche erheblich einschränken.
3. Für Mischbatterien ist es wichtig, daß Wasser mit gleichem Druck eingefuhrt wird.
4. Um den optimalen Zustand dieses Produktes zu erhalten, wischen Sie es bitte nur mit einem feuchten, weichen Lappen ab. Auf keinen Fall Scheuermittel verwenden. Flecken lassen sich mit unverdünntem Geschirrspülmittel entfernen.
5. Keramikkartuschen in Hartwasserbereichen. Um die Lebensdauer zu verlängern und Wartungszeiten zu reduzieren empfiehlt Samuel Heath den Einsatz eines geeigneten Wasserenthärters. Fragen Sie Ihren Installateur/Designer um Rat.
6. Bitte merken Sie, dass alle Armaturen ab und zu eine Wartung brauchen. Diese soll durch einen kompetenten Installateur ausgeführt werden.

ATENCION

1. La instalación se debe realizar por un fontanero.
2. Antes de la instalación, deben pulgar las tuberias dejándo correr el agua por las tuberias para que arrastren los residuos de montaje/obra, con el motivo de que no afecte la eficacia del cartucho de ceramica.
3. Para grupo baño/ducha se recomienda que las presiones del agua caliente y frio sean equilibradas.
4. Para ayudar a mantener el acabado de este producto, limpiar con un paño húmedo suave. No se debe emplear productos abrasivos de baño. Las manchas se pueden quitar empleándo liquido lava-vajillas puro.
5. Cartuchos cerámicos en áreas de aguas duras . Para prolongar su vida útil y reducir los periodos de reparación de su grifo SamuelHeath recomendamos la instalación de un descalcificador de agua. Consulte a su instalador para más detalles.
6. Igual que con todo tipo de griferia y duchas, de vez en cuando será necesario llevar a cabo una revisión al producto; esto deberia ser realizado por un fontanero calificado.

ATTENZIONE

1. L'impianto deve essere montato da personale tecnico in conformità alle vigenti leggi.
2. Prima dell'installazione assicurarsi che le tubature dell' aqua siano pulite. Detriti o residui di lavorazione compromettono l'efficenza del cartuccio.
3. Per i gruppi, si raccomanda che le pressioni acqua calda e acqua fredda siano ugualmente bilanciate.
4. Per mantenere la finizione di ottima qualità, pulire con un panno soffice e inumidito. Non usare creme lucidanti e materiali abrasivi. Le macchie potranno essere tolte usando del detersivo per piatti puro.
5. Come con tutti i tipi di rubinetti e docce, di volta in volta è necessario effettuare una revisione al prodotto; questo dovrebbe essere fatto da un idraulico qualificato.

SAMUEL HEATH

Head Office and Customer Service
Leopold Street
Birmingham
England
B12 0UJ

T: +44 (0)121 766 4200

Info@samuel-heath.com
www.samuel-heath.co.uk

US Customer Service
usa@samuel-heath.com
www.samuel-heath.com

8-40384-IS
Issue: D